# Industrial Automation Products

## Master Selection Guide

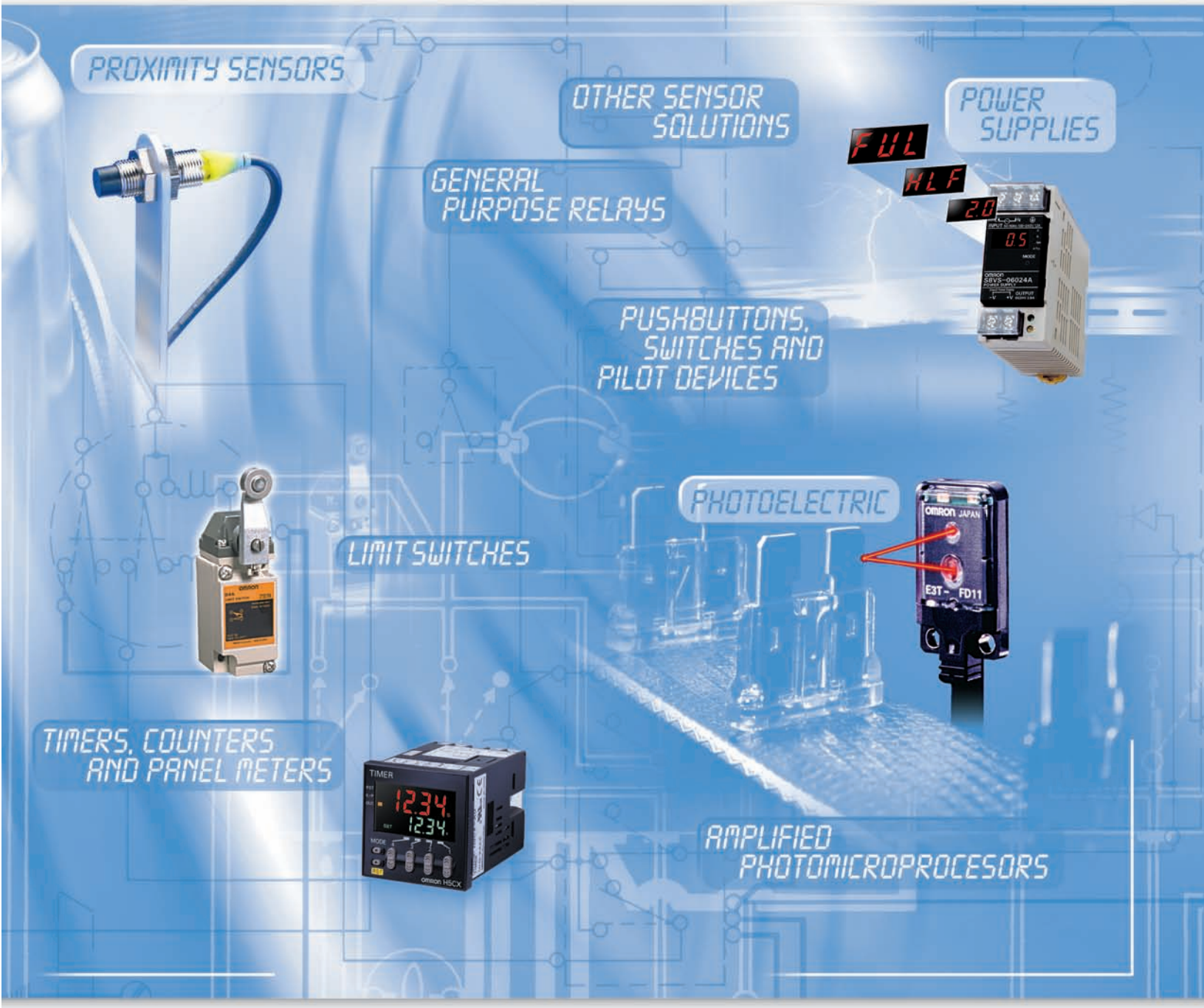


OMRON®
ELECTRONIC COMPONENTS

# An Industry Leader Makes a Great Automation Partner

Trust your automation needs to Omron, a global leader and innovator in industrial automation controls and systems. Your investment in Omron systems and training repays itself quickly with improved productivity, continued profitability and competitive manufacturing advantage.

## What Makes Omron Different?

### Quality

- All products 100% quality-tested before shipping
- Designed and manufactured to the highest ISO 9001, IPC and JIS standards

### Stability

- Over 70 years in the controls business, founded in 1933
- $6 billion USD global technology leader
- 40% of business comes from industrial automation; social systems, electronic components, automotive components and healthcare make up the balance

### Technology

- 7% of sales reinvested annually in R&D ensures leading edge solutions that improve our customers' productivity and profits
- Products offer security features to prevent tampering

### Ease of use

- Simple menus enable quick setup, operation and changeover for controllers, inspection systems and communications
- Helpful software tools provide data tracking and production monitoring
- One software package programs all Omron PLCs

### Flexibility

- More than 300,000 products help you design a complete automation solution from one source
- Easy forward/backward migration maintains the value of your automation investment

### Support

- Global, regional and local support in 65 countries through 1,500 offices
- Documentation available on-line
- Training, phone support, 24/7 emergency services give you peace of mind

# Contents


Photoelectric Sensors . . . . . 1
Amplified Photomicrosensors . . . . . 14
Proximity Sensors . . . . . 18
Limit Switches . . . . . 24
Other Sensors. . . . . 27
- Pressure Sensors. . . . . 28
- Encoders . . . . . 30
- Ultrasonic Sensors. . . . . 32

Pushbuttons, Switches and Pilot Devices . . . . . 33
Power Supplies. . . . . 36
Timers, Counters, Digital Panel Meters . . . . . 38
- Timers . . . . . 39
- Counters. . . . . 41
- Digital Panel Meters . . . . . 42

Terms and Conditions of Sales. . . . . 44


## Omron Delivers End-to-End Automation from a Single Source

Our large global installed base of plant automation solutions combine sensors, programmable controllers, human machine interface terminals, RFID and other track-and-trace code readers, motion control and products to complete control panel installation.

### Only the Best Products

This Master Selection Guide contains our latest and most popular products, and represents a fraction of what is available.

### For More Information...

**Internet**

Visit **www.components.omron,com**
For Data sheets and technical bulletins call phone number below.

**Phone**

Call us: **847.882.2288** Monday through Friday, 7:30 AM to 6:00 PM Central Time for more detailed product information, the location of your local sales office or Omron distributor.

email: components@omron.com

# Photoelectric Sensors

## Omron Smart Solutions

Accurately detect PET bottles and transparent material. Omron offers sensors to solve many packaging-related problems.

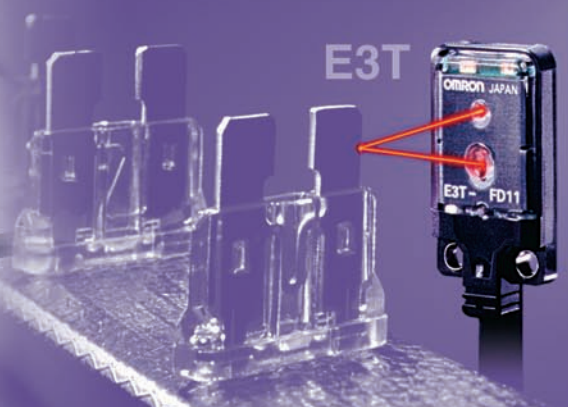


Subminiature low-cost sensor with built-in amplifier detects positioning and presence/absence in space-confined installations.

Save space with two fiber-optic amplifiers in a slim body; it offers large digital display and one-button teaching; over 100 sensing head/cables available.

Rugged IP67-rated diffuse sensor detects objects of any color, texture or glossiness from any direction using programmable foreground and background suppression.

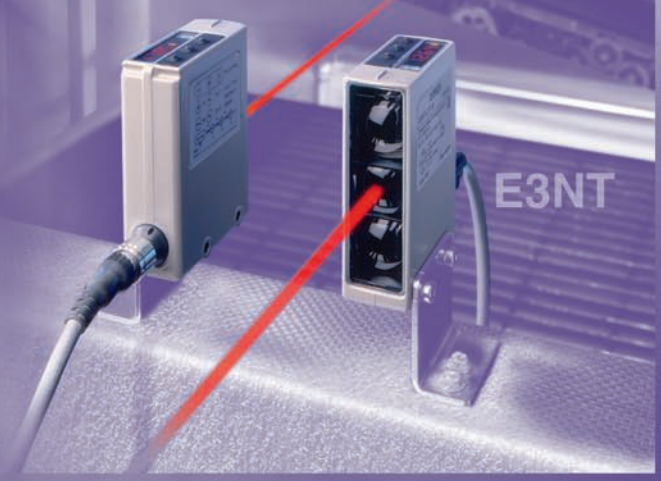

| | Photoelectric Sensors | | | |
|---|---|---|---|---|
| | | | | |
| | **E3Z** | **E3Z-LS** | **E3Z-B** | **E3T** |
| **Dimensions mm (in)** | 31 H x 10.8 W x 20 D (1.22 x 0.43 X 0.79) | 31 H x 10.8 W x 20 D (1.22 x 0.43 x 0.79) | 31 H x 10.8 W x 20 D (1.22 x 0.43 x 0.79) | 19 H x 12 W x 4 D (0.74 x 0.47 x 0.15) |
| **Amplifier type** | Built-in DC amplifier | Built-in DC amplifier | Built-in DC amplifier | Built-in DC amplifier |
| **Features** | • Sub-miniature sensor offers long sensing distances and high noise immunity<br>• IP67 rated<br>• Connector models available | • Foreground/background suppression<br>• Pre-wired 2 m cable or M8 connector<br>• Distance settable<br>• Stable sensing regardless of target's color | • Detects PET bottles | • Micro-miniature space saving<br>• Watertight IP67<br>• Pinpoint beam for detection of extremely small targets<br>• 1 meter range<br>• Hyper LED smallest visible red LED<br>• Flat and rectangular body styles<br>• CE conformance |
| **Through-beam sensing distance** | 15 m (49.2 ft) | – | – | 1 m (3.28 ft) |
| **Retroreflective sensing distance** | 4 m (13.12 ft) | – | 500 mm – 2 m depends on reflector | Polarized: 200 mm (7.88 in) |
| **Diffuse reflective sensing distance** | 1 m (3.28 ft) or 5 to 100 mm (0.2 to 3.94 in) | 20 mm to 200 mm (BGS)<br>40 mm to 200 mm (FGS) | – | 30 mm (1.18 in) 15 mm on certain convergent beam models |
| **Color sensing** | – | – | – | – |
| **Supply voltage** | 12 to 24 VDC | 12 to 24 VDC | 12 to 24 VDC | 12 to 24 VDC |
| **AC control output** | – | – | – | – |
| **DC control output type** | NPN or PNP | NPN or PNP | NPN or PNP | NPN or PNP |
| **Max. load** | 100 mA | 100 mA max. | 100 mA max. | 50 mA max. at 24 VDC |
| **Alarm** | – | – | – | – |
| **Response time** | 1 ms max. | Operation or reset: 1 ms max. | Operation or reset: 1 ms max. | 2 ms ON/OFF |
| **Materials: Lens**<br>**Case**<br>**Bracket**<br>**Cover** | Denatured polyallylate<br>PBT plastic<br>–<br>– | Denatured polyallylate<br>PBT plastic<br>–<br>– | Denatured polyallylate<br>PBT plastic<br>–<br>– | Polycarbonate<br>PBT plastic<br>–<br>Polycarbonate |
| **Enclosure rating** | IP67, 1200 PSI (NEMA ICS5, ANNEXF) | IEC 60529 IP67, 1200 PSI (NEMA ICS5, ANNEXF) | IEC 60529 IP67, 1200 PSI (NEMA ICS5, ANNEXF) | IP67 |
| **Light source** | Pulse modulated infrared LED (860 nm) or visible red LED (680 nm) | Red LED (680 nm) | Red LED (680 nm) | Red "Pin Point" LED (670 nm) |
| **Circuit protection** | Load short circuit and reverse polarity | Reverse polarity, output short-circuit | Reverse polarity, output short-circuit | Load short circuit and reverse polarity |
| **Mutual interference protection** | On all except through-beam models | Yes | Yes | On all except through-beam models |
| **Operation mode** | Light-ON / Dark-ON switch selectable | Light-ON / Dark-ON switch selectable | Light-ON / Dark-ON switch selectable | Light-ON / Dark-ON separate models |
| **Applications** | General purpose sensing; Sub-miniature, long detection distances, noise immunity; IP67 rated; CE approved | General purpose; Material handling; Packaging; Background suppression | PET bottles and transparent objects | Flat or rectangular micro-miniature package; Washdown environments; Pinpoint beam for extremely small target detection; CE conformance; Latest generation technologies |

| | E3NT | E3F2 | E3G-L1/L3 | E3S-A |
|---|---|---|---|---|
| | | | | |
| **Dimensions mm (in)** | 88.7 H x 27 W x 65.1 D (3.49 x 1.06 x 2.56) | 18.5 dia. x 65 L (0.73 x 2.56) | 40 H x 18.4 W x 27 D (1.57 x 0.72 x 1.06) | 22.3 H x 12.4 W x 44 or 50 D (0.88 x 0.49 x 1.73 or 1.97) |
| **Amplifier type** | Built-in DC amplifier | Built-in AC or DC amplifier | Built-in DC amplifier | Built-in DC amplifier |
| **Features** | • Programmable BGS/FGS diffuse sensor<br>• Digital, software configurable<br>• Detects any color, texture, or glossiness from any direction<br>• Double-triangulated optics<br>• Rugged housing withstands extreme environment | • Rugged stainless, nickel plate brass, and plastic models are chemical resistant<br>• Wide operating voltage range<br>• AC/DC<br>• UL, CSA, CE certified<br>• Connector models available | • Distance settable pinpoint beam<br>• TEACH mode for reliable detection of minute objects any color, material, or glossiness<br>• IP67; NEMA 4; CE approved | • Fast response time<br>• Selectable Light-ON / Dark-ON operation<br>• Alarm output indicates deteriorating sensing conditions<br>• Timer versions available |
| **Through-beam sensing distance** | – | To 7 m (22.97 ft) | – | 7 m (23 ft) |
| **Retroreflective sensing distance** | – | To 2 m (6.56 ft) | – | Polarized: 0.1 to 2 m (0.33 to 6.56 ft) |
| **Diffuse reflective sensing distance** | 0.2 m to 2 m | To 300 mm (11.81 in) | 5 to 200 mm (0.19 to 7.87 in) | 0 to 100 mm (0 to 3.94 in)<br>10 to 200 mm (0.04 to 7.87 in)<br>0 to 700 mm (0 to 27.56 in) |
| **Color sensing** | – | – | – | – |
| **Supply voltage** | 10 to 30 VDC | 24 to 240 VAC 50/60 Hz. or 10 to 30 VDC | 10 to 30 VDC | 10 to 30 VDC |
| **AC control output** | – | SCR 200 mA max. | – | – |
| **DC control output type** | NPN or PNP or complementary | NPN/PNP separate models | NPN or PNP | NPN or PNP |
| **Max. load** | 100 mA max. | 100 mA max. at 30 VDC | 100 mA max. at 30 VDC | 100 mA max. at 30 VDC |
| **Alarm** | Yes | – | – | 50 mA max. NPN/PNP |
| **Response time** | ≤ 2.5 ms | 30 ms AC models;<br>2.5 ms DC models | 1.5 ms or 2.5 ms model dependent | 0.5 ms max. |
| **Materials: Lens**<br>**Case**<br>**Bracket**<br>**Cover** | Housing: Powder-coated aluminum<br>Front pane: Glass<br>Keyboard: HTV silicone<br>Seals: RTV silicone | Plastic<br>ABS or nickel-plated brass or stainless steel<br>– | Acrylic (PMMA)<br>PBT plastic<br>Stainless steel 304<br>– | Denatured polyarylate<br>PBT plastic<br>Stainless steel<br>– |
| **Enclosure rating** | IP67 (EN 60529/IEC 529) | NEMA 1, 2, 4 (indoor) IP66 AC models; IP67 NEMA 6 Metal versions, IP66 NEMA 4 Plastic | IP67 NEMA 4 | NEMA 4X, 6, IP67 |
| **Light source** | Infrared LED (850-880 nm) | Infrared LED or Red LED | Infrared LED (860 nm) or red LED (670 nm) | Pulse modulated red and infrared LED |
| **Circuit protection** | Reverse polarity, overload, short-circuit | Reverse polarity, short circuit on DC power supply models only | Short-circuit, reverse polarity | Load short circuit and reverse polarity |
| **Mutual interference protection** | Yes | – | Yes | On all except through-beam models |
| **Operation mode** | Light-ON / Dark-ON programmable | Light-ON / Dark-ON selectable with control wire | Light-ON / Dark-ON switch selectable | Light-ON / Dark-ON switch selectable |
| **Applications** | Extreme conditions; Food & Beverage; Packaging; Material Handling; Car wash | General purpose sensing; Chemical resistant ABS version; Stainless or nickel-plated brass versions; Connector types; Cylindrical design; M18 mounting | Food and Bev, material handling, packaging applications; Multiple object detection | General purpose sensing; Washdown environment; Miniature size; High speed sensing 0.5 ms; Timers, vertical or horizontal mount versions |

| | E3X-DAN/DAB | E3X-DA-S | E3X-MDA | E3X-NA |
|---|---|---|---|---|
| | 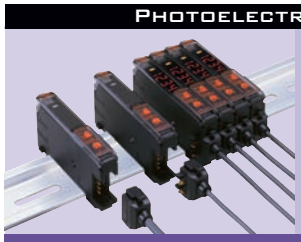 | 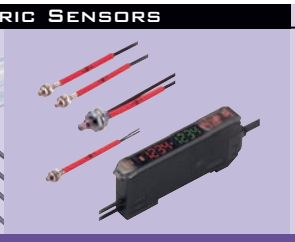 | | |
| **Dimensions mm (in)** | 31.5 H x 10 W x 64.3 D (1.24 x 0.39 x 2.53) | 32 H x 10 W x 70 D (1.26 x 0.39 x 2.75) | 32 H x 10 W x 70 D (1.26 x 0.39 x 2.75) | -NA□□, -NA□□F, -NAG□□: 31.5 H x 10 W x 64.3 D (1.24 x 0.39 x 2.53) -NA□□V: 33 H x 12 W x 81.5 D (1.29 x 0.47 x 3.21) |
| **Amplifier type** | All purpose fiber-optic amplifier | All purpose fiber-optic amplifier | All purpose fiber-optic amplifier | Fiber-optic amplifier |
| **Features** | • User selectable displays: digital, percentage and analog display<br>• Available in digital or dual analog/digital output<br>• Digital display can be read right-side-up regardless of amplifier orientation | • Power tuning<br>• Dual digital display<br>• 4 element LED<br>• 2 independent outputs<br>• Counter function | • Power tuning<br>• Dual digital display<br>• 4 element LED<br>• 2 channel amplifier<br>• AND/OR control output | • Master/slave connector design affords connectivity up to 16 amplifiers<br>• Wire saving amplifiers reduce installation time and minimize space requirements<br>• LED bar display<br>• Mutual interference protection<br>• Excellent response time<br>• M8 connector ready models and water resistant models |
| **Through-beam sensing distance** | Varies depending on the model and fiber chosen | Varies depending on the model and fiber chosen | Varies depending on the model and fiber chosen | Varies depending on the model and fiber chosen |
| **Retroreflective sensing distance** | Varies depending on the model and fiber chosen | Varies depending on the model and fiber chosen | Varies depending on the model and fiber chosen | Varies depending on the model and fiber chosen |
| **Diffuse reflective sensing distance** | Varies depending on the model and fiber chosen | Varies depending on the model and fiber chosen | Varies depending on the model and fiber chosen | Varies depending on the model and fiber chosen |
| **Color sensing** | Yes | Yes | Yes | Yes (E3X-NAG11/NAG41) |
| **Supply voltage** | 12 to 24 VDC | 12 to 24 VDC ±10%, Ripple (P–P) 10% max. | 12 to 24 VDC ±10%, Ripple (P–P) 10% max. | 12 to 24 VDC |
| **AC control output** | – | – | – | – |
| **DC control output type** | NPN or PNP | NPN or PNP | NPN or PNP | NPN or PNP |
| **Max. load** | 50 mA max. | 50 mA max. | 50 mA max. | 50 mA max. |
| **Alarm** | – | – | – | – |
| **Response time** | Standard mode: 1 ms<br>High-speed mode: 250 µs<br>Long-distance mode: 4 ms | 48 µs | Standard mode: 1 ms | -NA□□, -NA□□V, -NAG□□: 200 µs; -NA□□F: 50 µs |
| **Materials: Lens** | – | – | – | – |
| **Case** | PBT plastic | PBT plastic | PBT plastic | PBT plastic |
| **Bracket** | – | – | – | – |
| **Cover** | Polycarbonate | Polycarbonate | Polycarbonate | Polycarbonate (-NA□□)<br>Polyethersulfone (E3X-NA□□V) |
| **Enclosure rating** | IP50/IP66 | IP50 | IP50 | -NA□□, -NA□□F, -NAG□□: IP50; -NA□□V: IP66 |
| **Light source** | Red LED | Red, green and blue LEDs available | Red LED | -NA□□, -NA□□V, -NA□□F: Red LED; -NAG□□: Green LED |
| **Circuit protection** | Short circuit, Reverse polarity | Short circuit, reverse polarity | Short circuit, reverse polarity | Reverse polarity; Output short-circuit; Mutual interference; -NA□□F: Reverse polarity; Output short-circuit |
| **Mutual interference protection** | Yes | Yes | Yes | Yes |
| **Operation mode** | Light-ON / Dark-ON switch selectable | Light-ON / Dark-ON switch selectable | Light-ON / Dark-ON selectable | Light-ON / Dark-ON (switch selectable) |
| **Applications** | All purpose, high speed, mark sensing, transparency detection, color discrimination, delicate level difference, minute object, high-precision positioning | All purpose, high speed, mark sensing, transparency detection, color discrimination, delicate level difference, minute object, high-precision positioning | All purpose, high speed, mark sensing | General purpose, high speed, mark sensing |

# Over 100 Fiber-Optic Sensor Cables

One exactly matches your requirements

## Constant Flexing Applications

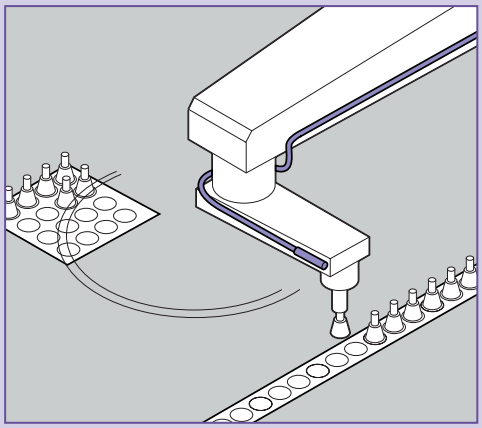

The special construction of these fiber-optic cables resists breaking and enables them to withstand the punishing effects of constant flexing or tight bending. The stranded fiber core can be bent to a radius as small as 4 mm with no loss in light intensity. They are ideal for use on moving and articulating equipment such as robotic arms.

### Available Models

**Through-Beam**

E32-T11 (680 mm sensing distance, M4 threaded head)
E32-T21 (200 mm sensing distance, M3 threaded head)
E32-T22B (200 mm sensing distance, 1.5 mm dia. head)

**Diffuse**

E32-D11 (170 mm sensing distance, M6 threaded head)
E32-D21 (30 mm sensing distance, M3 threaded head)
E32-D21B (70 mm sensing distance, M4 threaded head)
E32-D22B (30 mm sensing distance, 1.5 mm dia. head)

## Chemical Resistant Applications

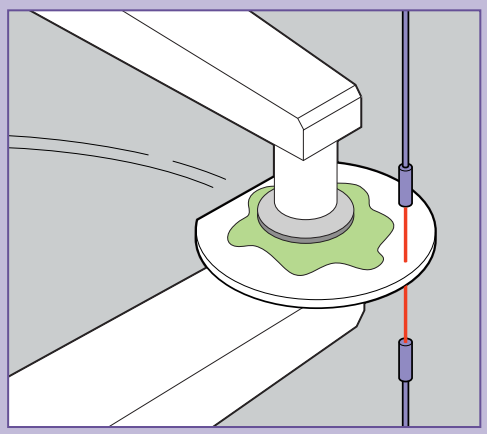

Teflon® coated fiber optic cables provide long lasting reliability in sensing environments where corrosive fluids and gasses are present. They are designed for use where strong chemicals are manufactured or being used for processing or cleaning.

### Available Models

**Through-Beam**

E32-T11F (2000 mm sensing distance, 7.2 mm dia. head)
E32-T12 F (3000 mm sensing distance, 5 mm dia. head)
E32-T14F (400 mm sensing distance, 5 mm dia., side view head)
E32-T81F-S (700 mm sensing distance, 6 mm dia. head, to 200°C)

**Diffuse**

E32-D12F (95 mm sensing distance, 6 mm dia. head)

## High Temperature Applications

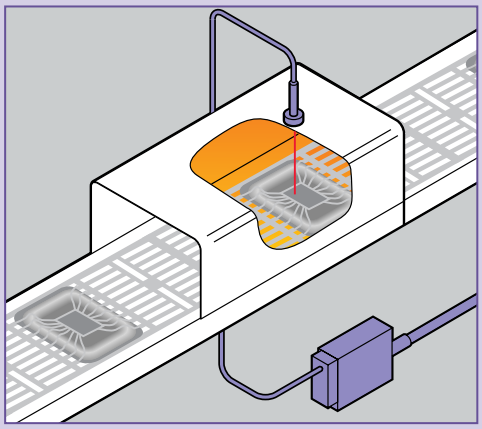

Omron offers a variety of heat resistant fiber optic cables that can operate reliably in temperatures up to 400°C (752°F). The fluororesin and armored stainless steel sheaths protect the fibers for use in ovens and other high heat applications.

### Available Models

**Through-Beam**

E32-T51 (760 mm sensing distance, M4 threaded head, to 150°C)
E32-T54 (230 mm sensing distance, 2 mm dia., side view head, to 150°C)
E32-T61-S (450 mm sensing distance, M4 threaded head, stainless steel sheath, to 350°C)
E32-T84S-S (1300 mm sensing distance, 3 mm dia. L-shaped head, to 200°C)

**Diffuse**

E32-D51 (230 mm sensing distance, M6 threaded head, to 150°C)
E32-D61-S (90 mm sensing distance, M6 threaded heads, stainless steel sheath, to 350°C)
E32-D73-S (60 mm sensing distance, M4 threaded head, stainless steel probe, to 400°C)
E32-D81R-S (90 mm sensing distance, M6 threaded head, to 200°C)

## Wide Area Sensing Applications

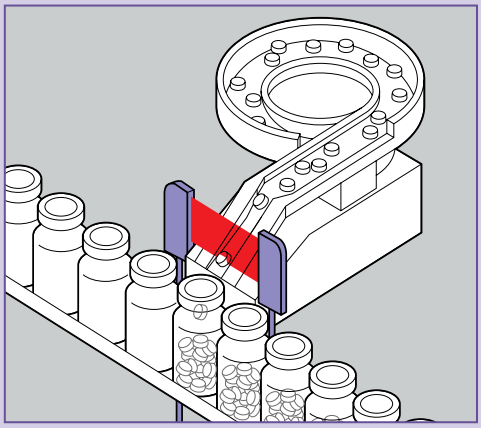

Applications that require a larger target area for sensing small, randomly positioned objects are ideal for Omron's wide area sensing fiber optic cables. They project a wide plane of light that can detect very small objects anywhere within the width of the beam. Use them for detecting pills in packaging and similar applications.

### Available Models

**Through-Beam**
E32-M21 (610 mm sensing distance, four M3 heads)
E32-T16 (2800 mm sensing distance, 10 mm wide beam)
E32-T16P (1100 mm sensing distance, 11 mm wide beam)
E32-T16W (1800 mm sensing distance, 30 mm wide beam)
E32-T16J (1000 mm sensing distance, 11 mm wide beam, side view)
**Diffuse**
E32-D36P1 (100 mm sensing distance, 10.85 mm wide beam)

## Precise Positioning Applications

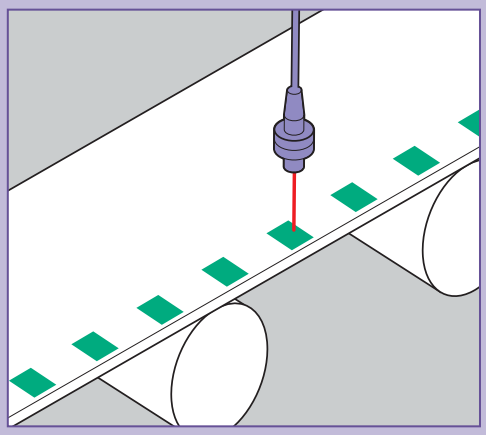

When it is critical to position objects or machinery accurately and consistently, Omron provides a solution with a unique coaxial cable design that surrounds the light emitting fiber with light detection fibers.

### Available Models

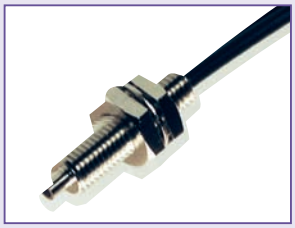

**Diffuse**
E32-CC200 (300 mm sensing distance, M6 threaded head, 16 receivers)
E32-D32L (150 mm sensing distance, 3 mm dia. head, 16 receivers)
E32-D32 (75 mm sensing distance, 2 mm dia. head, 4 receivers)
E32-C31 (75 mm sensing distance, M3 threaded head, 4 receivers)
E32-C41 (35 mm range, M3 threaded head, 6 receivers)
E32-C42 (35 mm range, 2 mm dia. head, 6 receivers)

## Detect Minute Objects

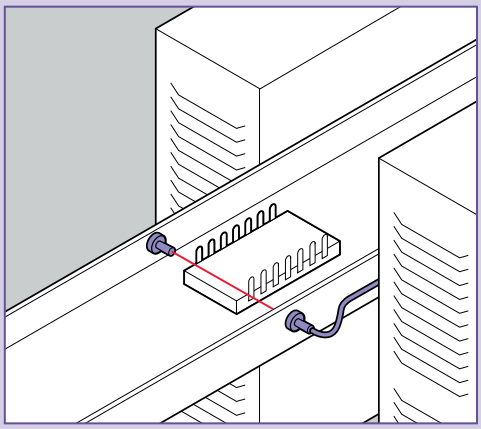

Detect extremely small objects, as small as 0.5 mm, in very space-restricted areas. Most are available with bendable "probe" tips that let you mount the head away from the detection area and bend the probe tip to the precise sensing area.

### Available Models

**Through-Beam**
E32-T22 (220 mm sensing distance, 2 mm dia. head)
E32-TC200B (760 mm sensing distance, 1.2 mm dia. head, probe tip)
E32-TC200E (220 mm sensing distance, M3 threaded head)
E32-TC200F (220 mm sensing distance, 0.9 mm dia. head, probe tip)
**Diffuse**
E32-DC200B (300 mm sensing distance, 2.5 mm dia. head, probe tip)
E32-DC200E (80 mm sensing distance, M3 threaded head)
E32-DC200F (80 mm sensing distance, 1.2 mm dia. head, probe tip)
E32-D33 (16 mm sensing distance, 0.8 mm dia. head, probe tip)
E32-D331 (3 mm sensing distance, 0.5 mm dia. head, probe tip)

## Background Suppression Applications

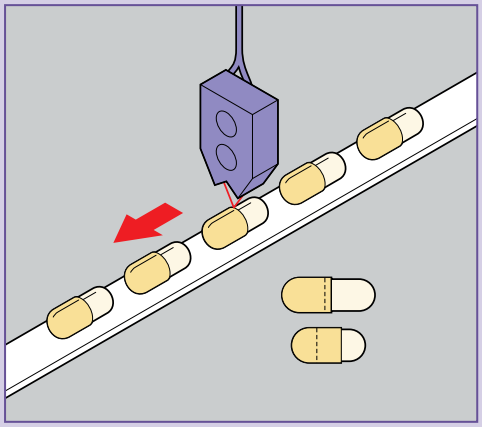

Fiber optic cables with convergent beam head configurations solve the problem of background reflections in space-restricted areas. These special cables can also be used for precise positioning of objects or machinery. Left- and right-side emitter models eliminate interference when using two or more E32-L56 sensing heads.

**Available Models**

**Convergent Beam**

E32-L24L (4±2 mm range, side view head, to 105°C)
E32-L24S (0-4 mm range, side view head)
E32-L25 (3.3 mm range, side view head)
E32-L25L (7.2±1.8 mm range)
E32-L25A (3.3 mm range)
E32-L56E□ (4-12 mm range)
E32-L66 (5-18 mm range, sensing head to 300°C)

## Long Range Detection of Small Objects

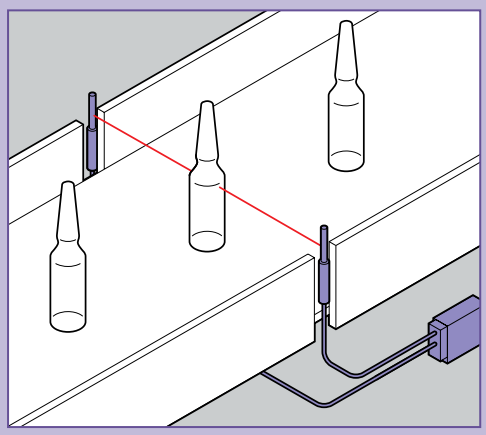

A wide variety of fiber optic cables with special sensing heads and lenses are available for detecting small objects over longer distances in space-confined areas. They are available in through-beam or diffuse versions with threaded and non-threaded heads for more versatile mounting.

**Available Models**

**Through-Beam**

E32-T11L (1330 mm sensing distance, M4 threaded head)
E32-T12L (1330 mm sensing distance, 3 mm dia. head)
E32-T14L (460 mm sensing distance, 3 mm dia., side view head)
E32-T17L (20,000 mm sensing distance, M14 threaded head)
E32-T21L (440 mm sensing distance, M3 threaded head)
E32-T22L (440 mm sensing distance, 2 mm dia. head)

**Diffuse**

E32-D11L (400 mm sensing distance, M6 threaded head)
E32-D12 (230 mm sensing distance, 3 mm dia. head)
E32-D16 (40 to 700 mm sensing distance, 17.5 mm square head)
E32-D21L (130 mm sensing distance, M4 threaded head)
E32-D22L (130 mm sensing distance, 3 mm dia. head)

## Fluid Level Detection

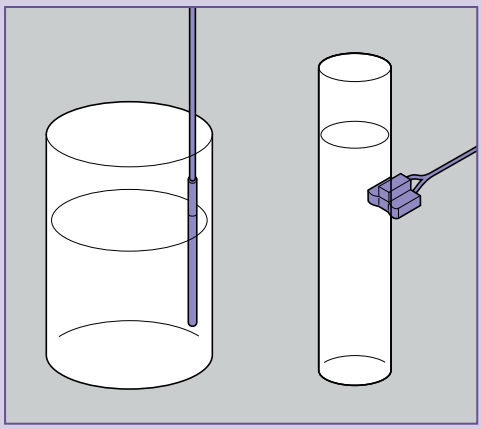

Omron offers two fiber optic sensing solutions for fluid level detection in space-confined areas: immersion style sensing heads can be submerged in the fluid to be monitored, and a tube-mounted sensing heads that can sense fluids through a clear tube.

**Available Models**

E32-D82F1 (Immersion type, 150 mm length)
E32-D82F2 (Immersion type, 350 mm length)
E32-A01 (External mount; 3.2, 6.4, 9.5 mm clear tube)
E32-A02 (External mount; 6 to 13 mm clear tube)
E32-L25T (External mount, 8 to 10 mm clear tube)
E32-D36F (External mount; clear tube, no diameter restriction)

Also consider EE-SPX613 Amplified Photomicrosensor

## Transparent Object Detection

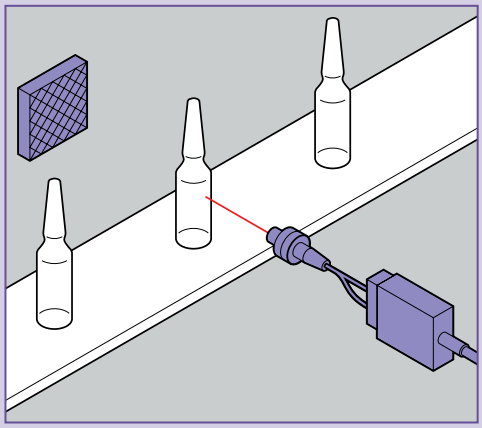

Sensing transparent objects is always a challenge. Omron solves this problem with fiber optic cables that are polarized and reflectors specially designed for sensing small transparent objects in tight spaces. They are ideal for sensing lenses, clear plastics, and transparent packaging materials.

**Available Models**

E32-R21 (Retroreflective, 10–250 mm range)
E32-R16 (Retroreflective, 150–1,500 mm range)

## Extreme Bending Applications

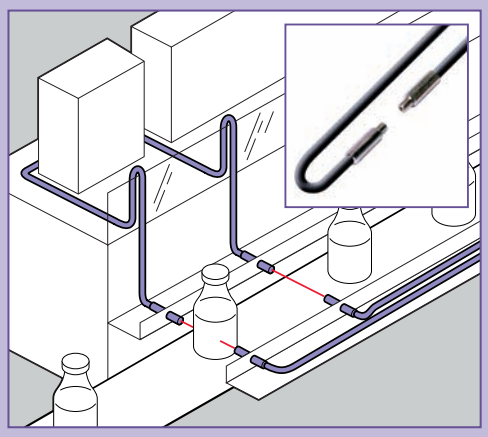

For machine applications that require extreme bending of fiber optic cables to conform to tight spaces, Omron offers a variety of cables that feature a unique multi-core construction. Unlike single-core cables that can lose their light transmission capability when bent tightly, the multi-core design ensures optimal light transmission even when bent 180° with a bending radius of 1 mm.

**Available Models**

**Through Beam**
E32-T11R (530 mm sensing distance, M4 threaded head)
E32-T12R (530 mm sensing distance, 3 mm dia. head)
E32-T14LR (210 mm sensing distance, 3 mm dia. head)
E32-T21R (130 mm sensing distance, M3 threaded head)
E32-T16WR (1300 mm sensing distance, 30 mm wide beam)
E32-T16JR (750 mm sensing distance, 11 mm wide beam, side view)
E32-T16PR (840 mm sensing distance, 11 mm wide beam)
E32-T22R (130 mm sensing distance, 2 mm dia. head)
E32-T24R (50 mm sensing distance, 1 mm dia. head, side view)

**Diffuse**
E32-D11R (170 mm sensing distance, M6 threaded head)
E32-D12R (170 mm sensing distance, 3 mm dia. head)
E32-D14LR (45 mm sensing distance, 6 mm dia. head, side view)
E32-D21R (30 mm sensing distance, M3 threaded head)
E32-D22R (30 mm sensing distance, 3 mm dia. head)
E32-D24R (15 mm sensing distance, 2 mm dia. head, side view)

## General-Purpose Industrial Applications

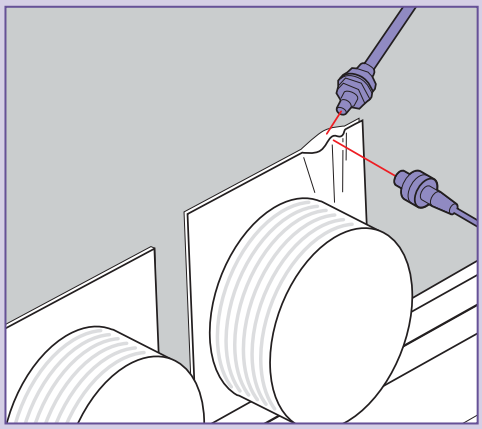

For most sensing applications, the space-saving combination of a fiber-optic amplifier and general-purpose fiber unit provides an economical solution.

**Available Models**

**Through-Beam**
E32-TC200 (760 mm sensing distance, M4 threaded head)
E32-TC200A (680 mm sensing distance, M3 threaded head)

**Diffuse**
E32-DC200 (300 mm sensing distance, M6 threaded head)

| | E3XA analog fiber-optic amplifier | E3S-CL | E3JK | E3JM |
|---|---|---|---|---|
| | | | | |
| **Dimensions mm (in)** | 40 H x 20.4 W x 30 D (1.57 x 0.80 x 1.18) | 42.6 H x 15.5 W x 40 D (1.7 x 0.61 x 1.57) | 50 H x 17.6 W x 50 D (1.97 x 0.69 x 1.97) | 65 H x 25 W x 75 D (2.56 x 0.98 x 2.95) |
| **Amplifier type** | Fiber-optic amplifier | Built-in amplifier | Built-in AC/DC amplifier | Built-in AC/DC amplifier |
| **Features** | • Ideal for detecting size, color and surface characteristics<br>• Four turn controls allow fine adjustment of sensitivity and operating point | • Background suppression<br>• Stable detection regardless of material color or size of object<br>• Sensing unaffected by dirty lens<br>• IP67 water resistant housing | • Complimentary relay output 1NO & 1NC or NPN/PNP<br>• Slim housing ideal for narrow installation spaces<br>• Universal AC/DC supply voltage | • Relay or transistor output available<br>• Built-in timers available<br>• Easy to wire terminal block<br>• Universal AC/DC supply voltage |
| **Through-beam sensing distance** | Varies depending on the model and fiber chosen | – | 5 m (16.4 ft) | 10 m (32.8 ft) |
| **Retroreflective sensing distance** | Varies depending on the model and fiber chosen | – | 0 to 3 m (9.8 ft)<br>0 to 5 m (16.4 ft) | Polarized 0 to 4 m (13.1 ft) |
| **Diffuse reflective sensing distance** | Varies depending on the model and fiber chosen | E3S-CL1: 5 to 200 mm<br>E3S-CL2: 5 to 500 mm | 0 to 300 mm (11.8 in) | 0 to 700 mm (2.3 ft) |
| **Color sensing** | Yes | – | – | – |
| **Supply voltage** | 12 to 24 VDC | 10 to 30 VDC | 24 to 240 VAC 50/60 Hz. and 12 to 240 VDC | 24 to 240 VAC 50/60 Hz. and 12 to 240 VDC |
| **AC control output** | 4 to 20 mA | – | Relay 3 A, 250 VAC | Relay 3 A, 250 VAC |
| **DC control output type** | NPN | NPN or PNP (switch selectable) | NPN/PNP wire selectable | NPN or PNP separate models |
| **Max. load** | Analog: 20 to 21.55 mA<br>Digital: 100 mA max. | 100 mA max. | 100 mA at 300 VDC | 100 mA at 48 VDC |
| **Alarm** | – | – | – | – |
| **Response time** | 2 ms max. ON/OFF | 2 ms max ON/OFF | 30 ms relay output;<br>3 ms for transistor output | 30 ms relay output;<br>5 ms for transistor output |
| **Materials: Lens**<br>**Case**<br>**Bracket**<br>**Cover** | Plastic<br>Plastic<br>–<br>– | Acrylic<br>Zinc die cast<br>Operating Panel: Sulfonated polyether<br>Stainless Steel | Plastic PMMA<br>Plastic ABS<br>–<br>Plastic PMMA | Plastic PMMA<br>Plastic ABS<br>–<br>Plastic PMMA |
| **Enclosure rating** | IP66 | IP67 | NEMA 1, 2, 12, IP64 | IP66 |
| **Light source** | Red LED | E3S-CL1: Red LED;<br>E3S-CL2: IR LED | Pulse modulated infrared LED;<br>Pulse modulated red LED | Infrared LED;<br>Polarized red LED on retro |
| **Circuit protection** | Short-circuit, reverse polarity | Short-circuit, reverse polarity | Reverse polarity on DC power supply only | Load short circuit on transistor output models only |
| **Mutual interference protection** | – | Yes | – | – |
| **Operation mode** | Light-ON / Dark-ON switch selectable | Light-ON / Dark-ON switch selectable | Light-ON / Dark-ON separate models | Light-ON / Dark-ON switch selectable |
| **Applications** | Food and Bev, material handling, semiconductor, electronics packaging applications | Food and Bev, material handling, packaging applications, rugged applications | Relay or transistor output; Detect shiny objects; Universal supply AC/DC | UL CSA; Easy to wire terminal block; Relay or transistor output models available; Built-in timers available; Universal supply AC/DC |

| | E3L | E3HT | E3X-NT/NM | E3X-NL |
|---|---|---|---|---|
| | | | | 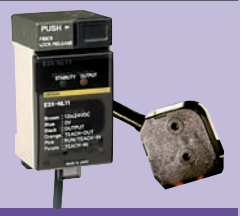 |
| **Dimensions mm (in)** | 55 H x 17 W x 50 D<br>(2.17 x 0.67 x 1.97) | 8.5 dia. x 41.5 L<br>(0.33 x 1.63) | Single Channel:<br>32.5 H x 10 W x 59 D<br>(1.28 x 0.39 x 2.32)<br>Four Channel:<br>32.5 H x 32.2 W x 59 D<br>(1.28 x 1.27 x 2.32) | Amplifier:<br>33 H x 32.2 W x 59 D<br>(1.29 x 1.27 x 2.32)<br>Sensing Head<br>(short): 29 H x 10.4 W x 29 D<br>(1.14 x 0.41 x 1.14)<br>(long): 42 H x 20.4 W x 47 D<br>(1.65 x 0.80 x 1.85) |
| **Amplifier type** | Built-in DC amplifier | Built-in DC amplifier | Fiber-optic amplifier | Fiber-optic amplifier |
| **Features** | • Laser beam provides long distance spot sensing<br>• Class 1 versions require no additional protection<br>• Stability indicator signals upon deteriorating conditions | • Ideal for space-confined installation 8 mm housing<br>• Cost effective<br>• Nickel plate brass construction<br>• CE certified<br>• Connector models available | • Remote teach function<br>• Four fiber-optic cables can be mounted directly next to each other without mutual interference | • Ideal for sensing glossy objects • Easy-to-use TEACH function<br>• Remote TEACH function<br>• Mutual interference protection |
| **Through-beam sensing distance** | 10 m (32.8 ft)<br>2 m (6.56 ft) | To 1 m (3.28 ft) | Varies depending on the model and fiber chosen | – |
| **Retroreflective sensing distance** | – | – | Varies depending on the model and fiber chosen | – |
| **Diffuse reflective sensing distance** | 200 to 500 mm<br>(7.90 to 19.7 in) | To 35 mm (1.38 in) | Varies depending on the model and fiber chosen | Short range: 10 ±3 mm<br>Long range: 20 ±7 mm |
| **Color sensing** | – | – | – | – |
| **Supply voltage** | 12 to 24 VDC | 12 to 24 VDC | 12 to 24 VDC | 12 to 24 VDC |
| **AC control output** | – | – | – | – |
| **DC control output type** | NPN open collector or<br>NPN constant current source or<br>PNP open collector | NPN & TTL logic | NPN, PNP | NPN |
| **Max. load** | NPN 100 mA; NPN type: Load (relay, sink) logic: 80 mA<br>Voltage (source) logic: 3 mA<br>PNP type: Load (relay, source) logic: 80 mA | Relay (sink) 80 mA max. | 100 mA max. at 30 VDC<br>100 mA max. at 40 VDC<br>(E3X-VG) | 100 mA |
| **Alarm** | NPN or PNP 50 mA at 24 VDC. | – | – | – |
| **Response time** | 1 ms ON/OFF or<br>3 ms ON/OFF | 10 ms ON/OFF through-beams;<br>6 ms ON/OFF diffuse models | 500 µs | 1 ms max. |
| **Materials: Lens** | Plastic (PMMA) | Plastic | – | – |
| **Case** | Zinc die cast | Nickel-plated brass | PBT plastic | PBT plastic |
| **Bracket** | – | – | – | – |
| **Cover** | – | – | Polycarbonate | Polycarbonate |
| **Enclosure rating** | NEMA 4, IP67 | NEMA 1, 3, 4X, 6, 12 IP66 | IP50 | IP50 |
| **Light source** | Infrared pulse modulated laser diode (780 nm) or visible red pulse modulated laser diode (670 nm) | Pulse modulated infrared LED | Pulse modulated red LED | Red LED |
| **Circuit protection** | Load short circuit and reverse polarity | Reverse polarity and load short circuit | Short circuit and reverse polarity | – |
| **Mutual interference protection** | Standard level | – | Provided | Yes |
| **Operation mode** | Light-ON / Dark-ON wire selectable | Light-ON / Dark-ON separate models | Light-ON / Dark-ON switch selectable | Light-ON / Dark-ON switch selectable |
| **Applications** | Laser Photoelectric Prewired Sensor; Provides long distance detection of objects down to 0.1 mm dia. | CE certified; 8 mm cylindrical housing fits in compact spaces; Connector types available; Dual output NPN & TTL | General purpose, background suppression | Luster detection, tight space application |

| | E3S-C | E3S-CR | E3MC | E3M-V |
|---|---|---|---|---|
| | | | | |
| **Dimensions mm (in)** | Horizontal: 23 H x 20.4 W x 57.5 D (0.91 x 0.80 x 2.24)<br>Vertical: 57.5 H x 20.4 W x 23 D (2.24 x 0.80 x 0.91) | Horizontal:<br>57 H x 20.4 W x 23 D (2.24 x 0.80 x 0.91) | 53.2 H x 30.4 W x 98 D (2.09 x 1.19 x 3.85) | 68.5 H x 21 W x 47.7 D (2.70 x 0.83 x 1.46) |
| **Amplifier type** | Built-in DC amplifier | Built-in DC amplifier | Self-contained | Self-contained |
| **Features** | • Rugged metal body<br>• 6 times normal sensing distance<br>• NEMA 4X, 6P, IP67<br>• Vertical and horizontal body styles<br>• Fuzzy logic mutual interference protection<br>• CE conformance | • Clear material detection specially tuned for glass and plastic bottles<br>• Compensates for "lens effects"<br>• IP67 rating, versatile NPN/PNP, L.O., D.O., in one unit<br>• Rugged die cast metal housing | • RGB color sensor detects subtle color differences<br>• Remote TEACH function<br>• Four-color storage capability<br>• Lensed and fiber-optic versions | • Color mark sensor<br>• Remote control setup<br>• Green LED detects yellow on white<br>• Stable operation on shiny surfaces |
| **Through-beam sensing distance** | 30 m (98.43 ft) | – | Varies depending on the model and fiber chosen | – |
| **Retroreflective sensing distance** | Polarized: 3 m (9.84 ft) | 250 mm (9.84 in) or 1 m (3.28 ft) | – | – |
| **Diffuse reflective sensing distance** | 700 mm (27.56 in) and 2 m (6.56 ft) | – | Varies depending on the model and fiber chosen | 10 mm ±3 mm |
| **Color sensing** | – | – | Yes | Yes |
| **Supply voltage** | 10 to 30 VDC | 10 to 30 VDC | 24 to 240 VDC | 10 to 30 VDC, 10% Ripple max. |
| **AC control output** | – | – | – | – |
| **DC control output type** | NPN or PNP selectable | NPN/PNP switch selectable | NPN, PNP | NPN/PNP |
| **Max. load** | 100 mA max. at 30 VDC | 100 mA at 30 VDC | 100 mA | 100 mA |
| **Alarm** | – | – | – | – |
| **Response time** | 1 ms ON/OFF (2 ms ON/OFF for short range diffuse models) | 2 ms ON/OFF | 1 output: standard - 3 ms high-speed - 1 ms<br>4 output: standard - 6 ms high-speed - 2 ms | 50 µs |
| **Materials: Lens** | Acrylic | Acrylic | – | Acrylic |
| **Case** | Zinc die cast | Zinc die cast | Zinc-diecast | PBT |
| **Bracket** | Stainless steel | Stainless steel | Fiber Head: -X/MX: ABS | – |
| **Cover** | Op. panel: Sulfonated Polyether | Panel: Sulfonated polyether | PES | – |
| **Enclosure rating** | NEMA 1,4X, 6P, 12, 13, IP67 | NEMA 6P, IP67 | IP66 w/ protective cover in place | IP67 |
| **Light source** | Pulse mod. infrared (880 nm) Red LED (700 nm) on retro | Red LED (670 nm) | Red, green, and blue LED | Green LED |
| **Circuit protection** | Load short circuit and reverse polarity | Reverse polarity and load short circuit | Reverse polarity, short-circuit | Short circuit, reverse polarity |
| **Mutual interference protection** | On all except through-beam models | Provided | – | – |
| **Operation mode** | Light-ON / Dark-ON switch selectable | Light-ON / Dark-ON switch selectable | Light-ON / Dark-ON switch selectable | Light-ON / Dark-ON, switch selectable |
| **Applications** | Washdown environments; Long range sensing 30 m; NPN /PNP selectable; CE conformance requirements; Highly shock resistant 100 g; Metal body | Clear material sensor; Rugged; Detects clear bottles reliably even with "lens effects"; Connector versions available | Color differentiation, Food and Bev, material handling, packaging applications | High-speed mark detection |

| | E3S-LS3N | E3C-V | E3HF | F3C-AA41 |
|---|---|---|---|---|
| | | | 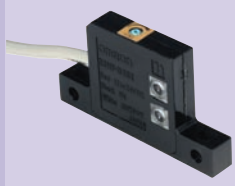 | |
| **Dimensions mm (in)** | 19.0 H x 10.0 W x 34.0 D (0.79 x 0.39 x 1.33) | E3C-VS1G/ E3C-VS3R: 15 H x 10 W x 28 D (0.59 x 0.39 x 1.10) E3C-VM35R/ E3C-VS7R: 20 H x 10 W x 47 D (0.78 x 0.39 x 1.85) | 28 H x 50 W x 7 D (1.10 x 1.97 x 0.28) | 90 H x 18 W x 45 D (3.54 x 0.70 x 1.77) |
| **Amplifier type** | Printed circuit board sensor | Pinpoint/mark sensing head (Use separate amplifier) | Built-in DC amplifier | Roller conveyor sensor |
| **Features** | • Stable detection without being affected by holes or notches • Will detect any color PC board | • Accurately detects color marks against many different backgrounds • Pinpoint beam enables it to detect small objects, marks and wires as small as 0.2 mm | • Thin profile 7 mm thick flat pack style sensor • Can detect 0.5 mm (0.02 in) objects with included slits • Light-ON or Dark-ON versions • Top and side through holes for easy mounting | • Detects objects from underneath roller conveyor • M12 connector • Unique optical system for setting distance, eliminates background influences |
| **Through-beam sensing distance** | – | – | 1 m (3.28 ft) | – |
| **Retroreflective sensing distance** | – | – | – | – |
| **Diffuse reflective sensing distance** | 10 – 60 mm | E3C-VS1G: 10 ±2 mm E3C-VS3R: 30 ±5 mm E3C-VM35R: 35 ±5 mm (mark) 20 to 80 mm (spot) E3C-VS7R: 70 ±10 mm (mark) 40 to 110 mm (spot) | 50 mm (1.97 in) | 0 to 750 mm |
| **Color sensing** | Yes | Yes | – | – |
| **Supply voltage** | 12 to 24 VDC ±10% Ripple max. | See E3C amplifiers | 12 to 24 VDC | 10 to 30 VDC |
| **AC control output** | – | See E3C amplifiers | – | – |
| **DC control output type** | NPN | See E3C amplifiers | NPN with pull-up resistor | NPN or PNP |
| **Max. load** | 50 mA | See E3C amplifiers | NPN 80 mA relay sink logic NPN 3 mA voltage source logic | 150 mA |
| **Alarm** | – | See E3C amplifiers | – | – |
| **Response time** | 1 ms | See E3C amplifiers | 6 ms ON/OFF or 10 ms ON/OFF on some models | 10 ms max. |
| **Materials: Lens** | Acrylic | E3C-VS1G/VS3R: Plastic, polycarb.; E3C-VM35R/VS7R: Glass | Plastic | Acrylic |
| **Case** | ABS | Plastic | Plastic | ABS |
| **Bracket** | – | – | – | – |
| **Cover** | – | – | – | – |
| **Enclosure rating** | IP40 | E3C-VS1G/VS3R: IP64 E3C-VM35R/VS7R: IP50 | NEMA 1, 3, 4X, 12 IP64 | IP40 |
| **Light source** | Red LED | E3C-VS1G: Pulse modulated Green LED E3C-VS3R/VM35R/VS7R: Pulse modulated Red LED | Pulse modulated infrared LED | Infrared LED |
| **Circuit protection** | – | See E3C amplifiers | Reverse polarity and load short circuit | Load short circuit and reverse polarity |
| **Mutual interference protection** | – | See E3C amplifiers | – | Yes |
| **Operation mode** | Light-ON | See E3C amplifiers | Light-ON / Dark-ON separate versions | Light-ON / Dark-ON selectable |
| **Applications** | PC board detection | Color mark applications, inspection and accurate positioning | Thin profile 7 mm photoelectric sensor; Ideal for space constrained applications; Good for small object detection | Packaging, roller conveyor object detection, material handling |

| | F3C-AL | E3C-LDA | E3C-□□□□ Sensor Heads and Amplifiers |
|---|---|---|---|
| | | | |
| **Dimensions mm (in)** | 90 H x 18 W x 45 D<br>(3.54 x 0.70 x 1.77) | Amplifier: 32 H x 10 W x 82.7 D (1.25 x 0.393 x 3.25)<br>Sensing Head: 25 H x 12.8 W x 33 D (0.98 x 0.50 x 1.29) | **Sensor Heads: -S10**: 14 H x 5.8 W x 10 D (0.55 x 0.22 x 0.39)<br>**-S20W**: 12.5 H x 2.8 W x 20 D (0.49 x 0.11 x 0.78)<br>**-S30T**: 15 H x 3 W x 7.85 D (0.59 x 0.11 x 0.31)<br>**-S30W**: 8.4 H x 3 W x 15 D (0.33 x 0.11 x 0.59)<br>**-S50**: 13 H x 7 W x 11 D (0.51 x 0.28 x 0.43)<br>**-1**: 12 H x 8 W x 25 D (0.47 x 0.31 x 0.98)<br>**-2**: 16 H x 12.4 W x 36 D (0.63 x 0.49 x 1.42)<br>**-DS5W**: 19.5 H x 2.8 W x 18 D (0.77 x 0.11 x 0.71)<br>**-DS10**: 15 H x 10 W x 28 D (0.59 x 0.39 x 1.10)<br>**Amplifiers: -A/C**: 82.5 H x 49 W x 48 D (3.24 x 1.93 x 1.89)<br>**-JB4P/JC4P**: 32.5 H x 14 W x 60 D (1.28 x 0.55 x 2.36)<br>**-GE4/GF4**: 35.5 H x 20.7 W x 27.2 D (1.39 x 0.81 x 1.07)<br>**-WH4F**: 75 H x 22.5 W x 80 D (2.95 x 0.88 x 3.15) |
| **Amplifier type** | Distance setting laser photoelectric sensor | Separate amplifier | Separate amplifier |
| **Features** | • Laser diode<br>• M12 connector<br>• Spot diameter 1.5 x 4 mm at 700 mm | • Laser heads<br>• Three beam types: spot, line and area<br>• Beam focusable and adjustable optical alignment<br>• Same programming as E3X-DA | **Sensor Heads:**<br>• Miniature interchangeable sensing heads<br>• Remote sensitivity adjustment<br>**Amplifiers:**<br>• Multiple sizes<br>• Track mountable models, slim<br>• 1/16 DIN size socket mount amplifier |
| **Through-beam sensing distance** | – | – | -S10: 100 mm (3.94 in); -S20W: 200 mm (7.87 in);<br>-S30W: 300 mm (11.81 in); -S3OT: 300 mm (11.81 in);<br>-S50: 500 mm (19.7 in); -1: 1 m (3.28 ft); -2: 2 m (6.56 ft) |
| **Retroreflective sensing distance** | – | 2 to 7 m | – |
| **Diffuse reflective sensing distance** | 120 to 700 mm | 30 to 1000 mm | -DS5W: 50 mm (1.97 in);<br>-DS10: 100 mm (3.94 in) |
| **Color sensing** | – | – | – |
| **Supply voltage** | 10 to 30 VDC | 12 to 24 VDC | 12 to 24 VDC; -A/C: 100 to 240 VAC |
| **AC control output** | – | – | -A/C: SPDT relay |
| **DC control output type** | NPN or PNP | NPN or PNP | -JB4P/GF4: PNP; -JC4P/GE4: NPN; -WH4F: NPN and PNP |
| **Max. load** | 150 mA | 50 mA max. | -JB4P/JC4P/GF4: 100 mA at 24 VDC<br>-WH4F: 100 mA at 40 VDC; -GE4: 80 mA at 24 VDC |
| **Alarm** | – | – | -JB4P/JC4P: 50 mA at 24 VDC |
| **Response time** | 10 ms max. | Standard mode: 1 ms<br>High-speed mode: 100 µs<br>High-resolution mode: 4 ms | -JB4P/JC4P: 2 ms or 41 ms max ON/OFF (Switch selectable)<br>-GE4/GF4/WH4F: 2 ms or 4 ms max ON/OFF (Switch selectable) |
| **Materials: Lens**<br>**Case**<br>**Bracket**<br>**Cover** | Acrylic<br>ABS<br>–<br>– | –<br>PBT<br>–<br>Polycarbonate | **Sensor Heads:** Lens: Plastic, polycarbonate; Case: Plastic, polycarbonate; -2: Zinc die cast; Cable Sheath: Plastic, polyethylene<br>–<br>**Amplifiers:** Plastic case |
| **Enclosure rating** | IP40 | IP50 | **Sensor Heads:** -S10/S50/DS10: NEMA 1, 2, 12, IP64<br>-S20W/DS5W: NEMA 1, IP50; -S30: NEMA 1, IP60<br>-1/2: NEMA 1,2, 4, 4X, 12, IP66<br>**Amplifiers:** NEMA 1, IP20; -JB4P: NEMA 1, 2, IP50 |
| **Light source** | Laser, Class 2, Red 670 nm | Laser, Class 2, Red diode 650 nm | Pulse modulated IR LED |
| **Circuit protection** | Load short circuit and reverse polarity | Short circuit and reverse polarity | Short circuit, and reverse polarity<br>-A/C: Not available |
| **Mutual interference protection** | Yes | Yes | – |
| **Operation mode** | Light-ON / Dark-ON selectable | Light-ON / Dark-ON selectable | Light-ON / Dark-ON; switch or jumper selectable |
| **Applications** | General purpose, minute object detection, material handling, packaging | All purpose, high-speed, mark sensing, transparency detection, color discrimination, minute object, high-precision positioning | Space constraint applications<br><br>**NOTE: Consult Omron for other models** |

# Amplified Photomicrosensors

## Omron Smart Solutions

### EE-SPX

*Slotted sensors provide end-of-travel and home position signals for positioning tables and assembly robots. Choose connector-ready or pre-wired models with pulse-modulated or non-pulse-modulated light source in a wide range of mounting shapes.*

### EE-SPY

*Use diffuse sensors with pulse modulated light source to detect passing target objects; connector ready for easy installation.*

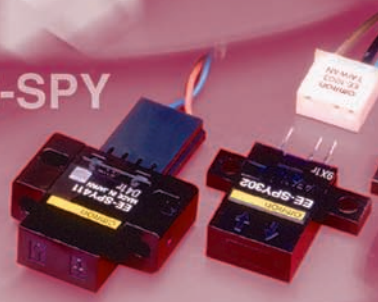

### EE-SPX613

*Liquid level sensor easily mounts to clear clear sight glass; equipped with sensitivity selector to allow for pipe discoloration over time.*

| | | | 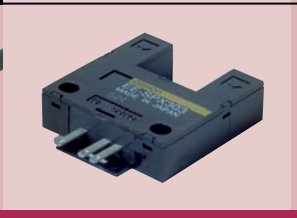 | 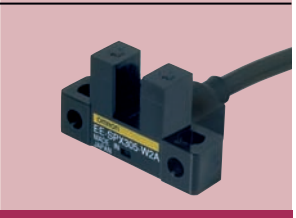 |
|---|---|---|---|---|
| | **Amplified** | **Amplified** | **Amplified** | **Amplified** |
| **Sub-category** | Slotted, non-pulse modulated, connector ready | Slotted, non-pulse modulated, pre-wired | Slotted, pulse modulated, connector ready | Slotted, pulse modulated, pre-wired |
| **Model numbers** | EE-SX470, EE-SX471, EE-SX472, EE-SX473, EE-SX474, EE-SX670, EE-SX671, EE-SX672, EE-SX673, EE-SX674, EE-SX670A, EE-SX671A, EE-SX672A, EE-SX673A, EE-SX674A, EE-SX470P, EE-SX471P, EE-SX472P, EE-SX473P, EE-SX474P, EE-SX670P, EE-SX671P, EE-SX672P, EE-SX673P, EE-SX674P | EE-SX770, EE-SX771, EE-SX772, EE-SX870, EE-SX871, EE-SX872, EE-SX770A, EE-SX771A, EE-SX772A, EE-SX870A, EE-SX871A, EE-SX872A, EE-SX770P, EE-SX771P, EE-SX772P, EE-SX870P, EE-SX871P, EE-SX872P, EE-SX770R, EE-SX771R, EE-SX772R, EE-SX870R, EE-SX871R, EE-SX872R | EE-SPX301, EE-SPX303, EE-SPX401, EE-SPX403, EE-SPX303-1, EE-SPX740, EE-SPX840, EE-SPX741, EE-SPX841, EE-SPX742, EE-SPX842, EE-SPX743, EE-SPX843 | EE-SPX302-W2A, EE-SPX304-W2A, EE-SPX305-W2A, EE-SPX306-W2A, EE-SPX402-W2A, EE-SPX404-W2A, EE-SPX405-W2A, EE-SPX406-W2A |
| **Connection type** | Connector or soldering terminals<br>Available connectors:**<br>Solder connector EE-1001,<br>Connector with 2 m cable<br>EE-1006/EE-1006A bracket | Pre-wired cable | Connector or soldering terminals<br>Available connectors:**<br>Solder connector EE-1001,<br>Connector with 2 m cable<br>EE-1006/EE-1006A bracket<br>Connector with 1 m cable for 740/840 series EE-1013 | Pre-wired cable |
| **Features** | • Standard, L-shaped, T-shaped and close mounting models<br>• Built-in indicator | • Standard, L-shaped, and T-shaped models<br>• UL, EMC and CE approvals<br>• Compact size<br>• Built-in indicator and optical axis guide | • Easily connects to TTLs, relays and PLCs<br>• Range of slot widths<br>• Built-in indicator<br>• Light modulation reduces external light interference<br>• Output of SPX301 / SPX401 / SPX303 / SPX403 can be converted to PNP | • Compact sensing heads<br>• Built-in indicator<br>• Light modulation reduces external light interference |
| **Slot width/sensing distance mm (in)** | 5 (0.20) | 5 (0.20) | 3.6 (0.14)<br>5 (0.20)<br>13 (0.51) | 3.6 (0.14)<br>5 (0.20) |
| **Output logic** | Light-ON/Dark-ON* | Light-ON or Dark-ON models | Light-ON or Dark-ON models | Light-ON or Dark-ON models |
| **Supply voltage** | 5 to 24 VDC | 5 to 24 VDC | 5 to 24 VDC | 5 to 24 VDC |
| **Output type** | NPN or PNP models | NPN or PNP models | NPN | NPN |
| **Max. load current output** | 100 mA (NPN); 50 mA (PNP) | 100 mA (NPN); 50 mA (PNP) | 80 mA; 50 mA (SPX74/SPX84) | 80 mA |
| **Response frequency** | 1 kHz (3 kHz typical) | 1 kHz | 500 Hz | 500 Hz |
| **Enclosure ratings** | IP50 | IP60 | IP50 | IP50 except terminals |
| **Ambient operating temperature** | -25° to 55°C | -25° to 55°C | -10° to 55°C | -10° to 55°C |
| **Ambient operating humidity** | 5% to 85% RH | 5% to 85% RH | 35% to 85% RH;<br>5% to 85% RH (SPX74/SPX84) | 35% to 85% RH |
| | *The EE-SX67□ Series can be used as Light-ON when the L terminal and positive (+) are connected. For Dark-ON, do not connect the L terminal. | | | |

| | | | | |
|---|---|---|---|---|
| | **Amplified** | **Amplified** | **Amplified** | **Amplified** |
| **Sub-category** | Diffuse, non-pulse modulated, connector ready | Diffuse, pulse modulated, connector ready | Convergent reflective, pulse modulated, connector ready | Diffuse retro-reflective, pulse modulated, connector ready |
| **Model numbers** | EE-SY671, EE-SY672, EE-SB5M, EE-SB5MC, EE-SB5V, EE-SB5VC, EE-SB5V-E | EE-SPY301, EE-SPY302, EE-SPY401, EE-SPY402 | EE-SPY311, EE-SPY312, EE-SPY411, EE-SPY412 | EE-SPZ301-A, EE-SPZ401-A |
| **Connection type** | Connector or soldering terminals<br>Solder connector: EE-1001<br>Connector with 2 m cable: EE-1006/EE-1006A bracket | Connector or soldering terminals<br>Solder connector: EE-1002<br>Connector with 1 m cable: EE-1003 | Connector or soldering terminals<br>Solder connector: EE-1001<br>Connector with 2 m cable: EE-1006/EE-1006A bracket<br>PNP output conversion connector EE-2002 | Connector or soldering terminals<br>Solder connector: EE-1002<br>Connector with 1 m cable: EE-1003 |
| **Features** | • Built-in sensitivity adjuster<br>• Selectable Light-ON or Dark-ON operation<br>• Output can be converted to PNP | • Easy connection to TTLs, relays and PLCs<br>• Light-ON indicator simplifies adjustment and optical axis monitoring<br>• Output can be converted to PNP | • Detects objects placed at least 20 mm in front of shiny backgrounds<br>• Detects objects as thin as 0.05 mm-dia. copper wire<br>• Detects dark-color objects<br>• Output can be converted to PNP | • Long sensing distance<br>• Easy sensitivity adjustment and optical axis monitoring with built-in indicator<br>• Use with optional reflector or highly reflective target |
| **Slot width/sensing distance mm (in)** | 1 to 5 (0.04 to 0.20)<br>5 (0.20)<br>19 (0.75) | 5 (0.20) | 2 to 6 (0.08 to 0.24)<br>5 (0.20) | 200 (7.87) with E39-R1 reflector |
| **Output logic** | Light-ON or Dark-ON* | Light-ON or Dark-ON | Light-ON or Dark-ON models | Light-ON or Dark-ON models |
| **Supply voltage** | 5 to 24 VDC (EE-SY)<br>5 to 12 VDC (EE-SB) | 5 to 24 VDC | 5 to 24 VDC | 5 to 24 VDC |
| **Output type** | NPN | NPN | NPN | NPN |
| **Max. load current output** | 100 mA (EE-SY)<br>80 mA (EE-SB) | 80 mA | 80 mA | 80 mA |
| **Response frequency** | 50 Hz | 100 Hz | 100 Hz | 100 Hz |
| **Enclosure ratings** | IP50 | IP50 | IP50 except terminals | IP50 except terminals |
| **Ambient operating temperature** | -10° to 55°C (EE-SY)<br>-25° to 55°C (EE-SB) | -10° to 55°C | -10° to 55°C | -10° to 55°C |
| **Ambient operating humidity** | 45% to 85% RH | 35% to 85% RH | 35% to 85% RH | 35% to 85% RH |
| | *EE-SY671 and EE-SY672 models can be used as Light-ON when the L terminal and positive (+) is connected. For Dark-ON, do not connect the L terminal. | | | |

| | | | 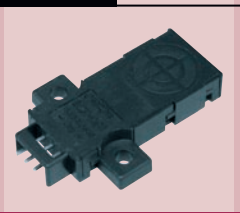 | 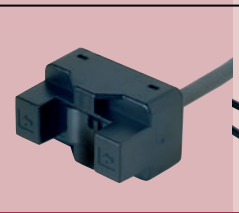 | 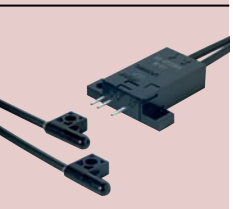 |
|---|---|---|---|---|---|
| | **Amplified** | **Amplified** | **Amplified** | **Amplified** | **Amplified** |
| **Sub-category** | Through-beam, pulse modulated | Reflective displacement sensor, non-pulse modulated | Inductive unshielded proximity sensor, connector ready | Liquid level sensor, pulse modulated, pre-wired | Fiber-optic, pulse modulated, connector ready |
| **Model numbers** | EE-SPW311,<br>EE-SPW321,<br>EE-SPW321-A,<br>EE-SPW411<br>EE-SPW421,<br>EE-SPW421-A | Z4D-F04A, Z4D-F04D | E2R-A01 | EE-SPX613 | *EE-SPZ301,<br>*EE-SPZ401,<br>EE-SPZ301Y-01<br>EE-SPZ401Y-01,<br>EE-SPZ301W-02<br>EE-SPZ401W-02,<br>EE-SPZ301W-01<br>EE-SPZ401W-01 |
| **Connection type** | Connector with<br>2 m cable for<br>EE-SPW311/411<br>Emitter: EE-1006L<br>Receiver: EE-1006D<br>EE-SPW321/421<br>Pre-wired with 2 m cable | Connector with<br>1 m cable: EE-1010D | Connector with<br>1 m cable: E22-01 | Pre-wired, 1 m cable | Solder terminal or connector:<br>Solder terminal EE-1002<br>Connector with 1 m wire EE-1003 |
| **Features** | • Provides long sensing distance in compact size<br>• EE-SPW321/421 feature a cable amplifier with 0.5 or 1 m cable between amp and sensing heads | • Compact, micro-displacement sensor provides resolution to 5 mm<br>• Analog or digital output models<br>• Ideal for double- sheet detection, material remaining on a web or roll | • Non-contact unshielded inductive proximity sensor detects metal targets regardless of color or surface texture<br>• Low profile space-saving shape | • Detects clear liquid presence by refraction<br>• Easy to install: straps to clear or translucent tubing<br>• Set sensitivity to match older pipe tinted by contents | • Sensing heads fit space-confined installations<br>• Visible indicator simplifies optical axis adjustment and monitoring |
| **Slot width/sensing distance mm (in)** | EE-SPW311/411<br>1 m (3.28 ft)<br>EE-SPW321/421<br>30 cm (11.81 in) | 4±1.25 (0.16±0.05) | 5 (0.20) | 6 to 13 (0.24 to 0.52) OD tubing with minimum 1 (0.04) thick walls | EE-SPZ301/401:<br>20 (0.79) with E32-TC200 cable<br>1 to 6 (0.04 to 0.24) with E32-DC200 cable<br>EE-SPZ□01W-01:<br>30 (1.18)<br>EE-SPZ□01W-02:<br>5 (0.20)<br>EE-SPZ□01Y-01:<br>1 to 3 (0.04 to 0.12) |
| **Output logic** | Light-ON or Dark-ON models | Light-ON | Normally open | Light-ON or Dark-ON, selectable | Light-ON or Dark-ON models |
| **Supply voltage** | 5 to 24 VDC<br>12 to 24 VDC | 12 to 24 VDC | 5 to 24 VDC | 12 to 24 VDC | 5 to 24 VDC |
| **Output type** | NPN | 1 to 5 V analog or NPN discrete | NPN | NPN | NPN |
| **Max. load current output** | 100 mA | 50 mA (NPN) | 100 mA | 100 mA | 80 mA |
| **Response frequency** | 1 ms max. | 5 ms max. analog<br>1.5 ms max. NPN | 5 kHz | – | 100 Hz |
| **Enclosure ratings** | IP60 (311/411)<br>IP64 (321/421) | IP50 | IP50 | IP50 | IP50 |
| **Ambient operating temperature** | -10° to 55°C (311/411)<br>-20° to 55°C (321/421) | -10° to 55°C | -10° to 55°C | -10° to 55°C | -10° to 55°C |
| **Ambient operating humidity** | 45% to 85% RH (311/411)<br>35% to 85%RH (321/421) | 35% to 85% RH | 35% to 85% RH | 5% to 85% RH | 35% to 85% RH |
| | | E39-L69 mounting bracket is optional. | | Includes cable ties and rubber anti-slip bands. | *Order E32-Series fiber-optic cables separately. |

# Proximity Sensors

## Omron Smart Solutions

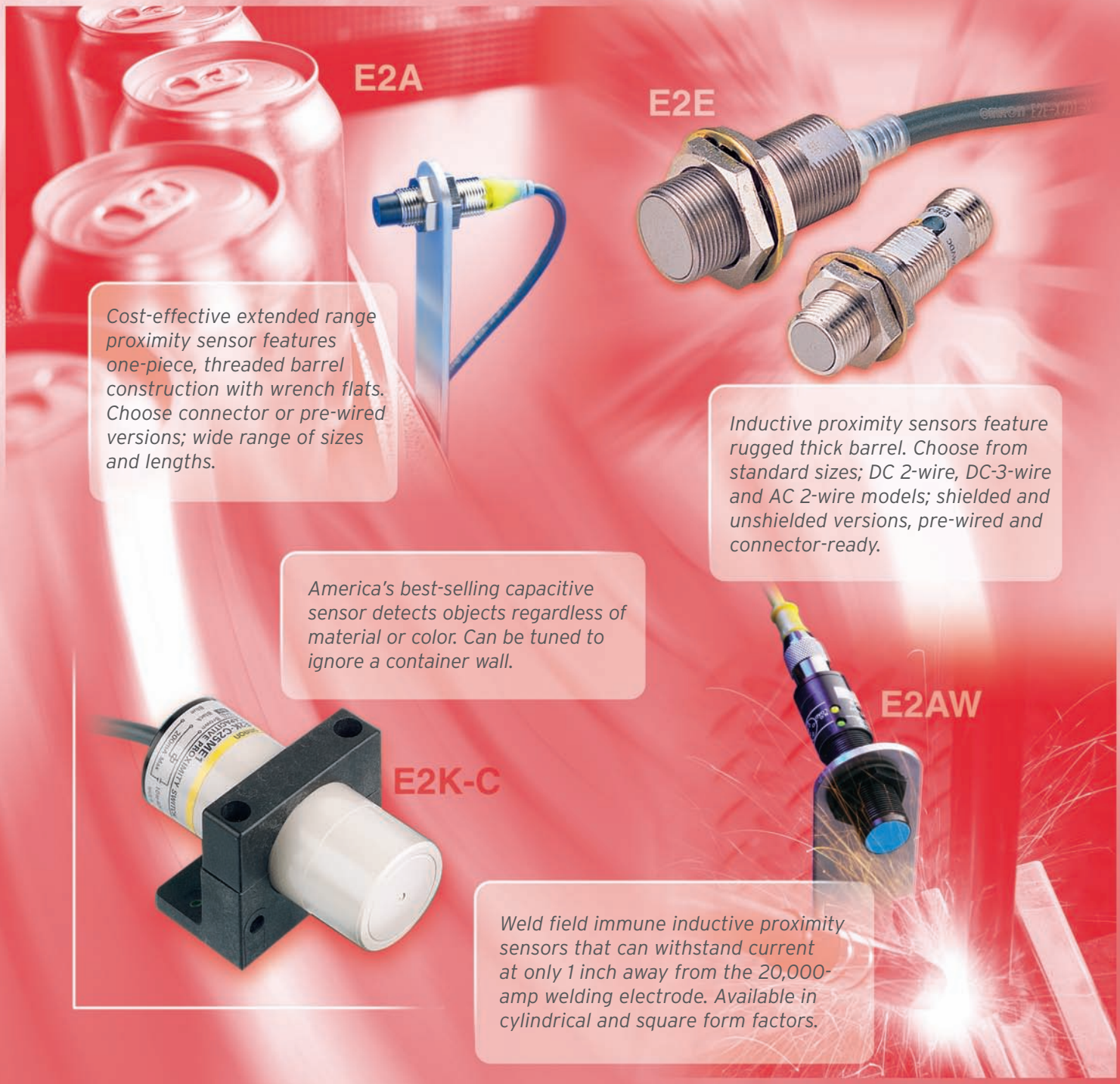


*Cost-effective extended range proximity sensor features one-piece, threaded barrel construction with wrench flats. Choose connector or pre-wired versions; wide range of sizes and lengths.*

*Inductive proximity sensors feature rugged thick barrel. Choose from standard sizes; DC 2-wire, DC-3-wire and AC 2-wire models; shielded and unshielded versions, pre-wired and connector-ready.*

*America's best-selling capacitive sensor detects objects regardless of material or color. Can be tuned to ignore a container wall.*

*Weld field immune inductive proximity sensors that can withstand current at only 1 inch away from the 20,000-amp welding electrode. Available in cylindrical and square form factors.*

## Inductive Proximity Sensors
### Threaded Cylindrical

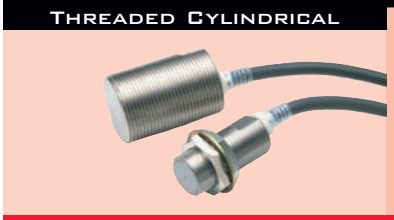
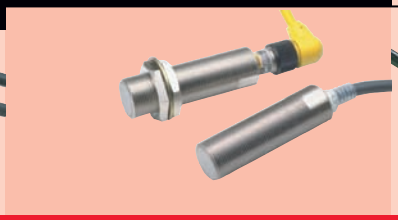
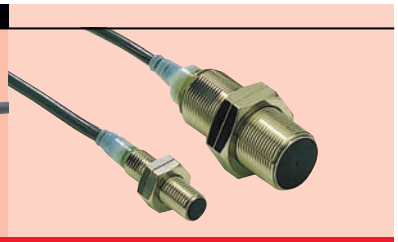

| | E2E | E2E2 | E2A |
|---|---|---|---|
| **Product type** | Short Barrel Cylindrical | Long Barrel Cylindrical | Extended Range OEM Proximity Sensor |
| **Dimensions mm (in)** | Dia. 4 x 25 (0.16 x 0.98);<br>M5 x 25 (0.20 x 0.98);<br>Dia. 5.4 x 25 (0.21 x 0.98);<br>M8 x 26 (0.31 x 1.02);<br>M12 x 33 (0.47 x 1.30);<br>M18 x 38 (0.71 x 1.50);<br>M30 x 43 (1.18 x 1.69) | M12 x 55 (0.47 x 2.17);<br>M18 x 60 (0.71 x 2.36);<br>M30 x 65 (1.18 x 2.56) | M8 Long and short barrel<br>M12 Long and short barrel<br>M18 Long and short barrel<br>M30 Long and short barrel |
| **Features** | • Omron's flagship highest quality proximity sensor family<br>• Vacuum potted internal circuitry<br>• Multiple connector versions<br>• Wrench flats for easy installation<br>• Superior barrel thickness and highest tightening torques available<br>• Pre-wired 2 m or 5 m cables<br>• Multiple pigtail versions<br>• Highly visible LED | • Vacuum potted internal circuitry<br>• Multiple connector versions<br>• Same solid construction and high quality as E2E with long barrel bodies<br>• Fully threaded body<br>• Pre-wired 2 m or 5 m cables<br>• Multiple pigtail versions<br>• Highly visible LED indication | • Extended sensing distances<br>• Economical large quantity OEM pricing<br>• Vacuum potted internal circuitry<br>• One-piece housing<br>• Stainless steel M8 barrel versions<br>• Wrench flats for easy installation<br>• Superior barrel thickness and highest tightening torques available<br>• Easily customized<br>• Pre-wired or connector versions |
| **Shielded sensing distances** | 0.8, 1, 1.5, 2, 3, 5, 7, and 10 mm | 2, 3, 5, 7, and 10 mm | 2, 4, 8, and 15 mm |
| **Unshielded sensing distances** | 2, 4, 5, 8, 10, 14, 18, and 20 mm | 5, 8, 10, 14, 18, and 20 mm | 4, 8, 16, 20, and 30 mm |
| **DC supply voltage** | 12 to 24 VDC (10-30 VDC operating) | 12 to 24 VDC (10-55 VDC operating) | 12 to 24 VDC (10-32 VDC operating) |
| **AC supply voltage** | 24 to 240 VAC or 90 to 140 VAC 50/60 Hz | 24 to 240 VAC 50/60 Hz | N/A |
| **2-wire DC output** | NO, NC; 100 mA max. | NO, NC; 100 mA max. | N/A |
| **3-wire DC output** | NPN-NO, NPN-NC, PNP-NO, PNP-NC; 100 or 200 mA max. | NPN-NO, NPN-NC Open Collector<br>PNP-NO, PNP-NC Open Collector<br>200 mA max. | NPN-NO, NPN-NC Open Collector<br>PNP-NO, PNP-NC Open Collector<br>200 mA max |
| **AC 2-wire output** | NO, NC; 300 mA max. | NO, NC; 200 or 300 mA max. | N/A |
| **Response frequency** | 25 Hz to 3 kHz | 25 Hz to 1.5 kHz | 100 Hz to 1.5 kHz |
| **Connections** | PVC Cables / Robotic Cables;<br>Multiple M12 Micro Change® or<br>M8 Nano Change® connectors;<br>Multiple pigtail connectors | PVC Cable 2 m or 5 m;<br>M12 Micro Change® connector | PVC Cable 2 m or 5 m;<br>M12 Micro Change® connectors 4 Pin;<br>M8 Nano Change® connectors 3 Pin;<br>M8 only stainless steel or NPB barrel |
| **Enclosure** | Nickel plated brass barrel;<br>Stainless steel barrel on M8 and smaller models;<br>Sensing face is PBT;<br>IEC IP67 / 1200 PSI Washdown;<br>NEMA 1, 3, 4, 6, 12, 13 | Nickel plated brass barrel;<br>Sensing face is PBT;<br>IEC: IP67/ 1200 PSI Washdown;<br>NEMA: 1, 4, 6, 12, 13 | Nickel plated brass barrel;<br>Sensing face is PBT;<br>IEC IP67 |
| **Agency approvals** | UL, CSA, CE | UL, CSA, CE | UL, CSA, CE |
| **Circuit protection** | Output short circuit, surge absorber, reverse polarity specific model dependent | Output short circuit, surge absorber, reverse polarity specific model dependent | Output short circuit, surge absorber, power source reverse polarity, and output reverse polarity |
| **Other** | Self diagnostic versions; AC/DC versions; Alternate frequency versions; Custom cable lengths and connectors | Alternate frequency versions; Custom cable lengths and connectors | Yellow LED 4 x 90° on connector types; Highly visible yellow LED on pre-wired types; World standard prox |
| **Application** | Use when high quality, high reliability is needed;<br>Standard distance inductive prox for ferrous metal sensing;<br>1200-PSI Washdown rated;<br>Connector or pigtail versions;<br>Easily customized;<br>DC2W, DC3W, AC2W, AC/DC | Use when high quality, high reliability is needed in a long barrel body;<br>Standard distance inductive prox for ferrous metal sensing;<br>1200-PSI Washdown Rated;<br>DC2W, DC3W, AC2W | Use when extended range general purpose sensing is required;<br>Extended distance inductive prox for ferrous metal sensing;<br>Large quantity OEM pricing available<br>Easily customized; DC3W |

| | Inductive Proximity Sensors<br>Threaded Cylindrical | Weld Field Immune | |
|---|---|---|---|
| | | | |
| | **E2F** | **E2AW** | **E2QW** |
| **Product type** | Threaded Plastic Cylindrical | Weld Field Immune Inductive | Weld Field Immune 9-Way Configurable Inductive |
| **Dimensions mm (in)** | M8 x 40 (0.31 x 1.57)<br>M8 x 30 (0.31 x 1.18)<br>M12 x 40 (0.47 x 1.57)<br>M12 x 35 (0.47 x 1.38)<br>M18 x 40 (0.71 x 1.57)<br>M30 x 50 (1.18 x 1.97) | M12 x 76<br>M18 x 76<br>M30 x 76<br>M30 x 67 | 40 mm wide x 68.5 mm high |
| **Features** | • IP68 watertight construction withstands washdown<br>• Plastic cylindrical inductive<br>• AC 2-wire or DC 3-wire-NPN models<br>• DC models have short-circuit protection and reverse polarity protection | • Weld field and noise immune<br>• WFI circuitry is designed to operate within 1 inch of a resistance welding electrode at 20,000 Amperes RMS<br>• NEMA 1, 3, 4, 6, 13<br>• AC/DC2W or DC3W-PNP type<br>• M12, M18 M30 Barrel Sizes | • Weld field and noise immune<br>• IP67<br>• AC/DC2W or DC3W-PNP type<br>• Extended Range WFI Proximity<br>• Rotatable head configurable in 9 different sensing directions<br>• 15 mm to 35 mm sensing ranges |
| **Shielded sensing distances** | 1.5, 2, 5, 10 mm | M12-2 mm, M18-5 mm, M30-10 mm | 15 mm, 20 mm, 25 mm |
| **Unshielded sensing distances** | N/A | M12-4 mm, M18-8 mm, M30-15 mm | 25 mm, 35 mm |
| **DC supply voltage** | 12 to 24 VDC (10-30 VDC operating) | 10 to 30 VDC | 10 to 30 VDC |
| **AC supply voltage** | 24 to 240 VAC (20 to 264 VAC operating) | 20 to 230 VAC/DC | 20 to 150 VAC/DC |
| **2-wire DC output** | N/A | – | – |
| **3-wire DC output** | NPN-NO, NPN-NC, PNP-NO, PNP-NC; 200 mA max. | PNP-NO, 200 mA max. | PNP-NO, 200 mA max. |
| **AC 2-wire output** | NO, NC; 100, 300 or 500 mA max. | N.O. 500 mA max. | N.O. 200 mA max. |
| **Response frequency** | 25 Hz to 2 kHz | 16 Hz | AC/DC-10 Hz, DC3W-150 Hz |
| **Connections** | PVC Cable 2 m standard,<br>5 or 10 m optional | 4 Pin Euro for DC3W models<br>4 Pin Micro for DC3W models<br>3 Pin Micro for AC/DC models | 4 Pin Euro for DC3W models<br>3 Pin Micro for AC/DC models |
| **Enclosure** | Polyallylate; IEC IP68;<br>NEMA: 1, 3, 4, 6, 12, 13 | Weld flash proof, hard coated metal housing;<br>High temperature abrasion-resistant sensing face;<br>NEMA: 1, 3, 4, 6, 13 | Weld flash proof, hard coated metal housing;<br>High temperature abrasion-resistant sensing face;<br>NEMA: 1, 3, 4, 6, 13 |
| **Agency approvals** | UL (on US models), CSA | UL, CSA | UL, CSA |
| **Circuit protection** | DC Models: Output short circuit, surge absorber, reverse polarity;<br>AC Models: Add –53 for short circuit protection and add –US for UL listed version | DC models have non-latching short-circuit protection and reverse polarity protection;<br>AC/DC2W models are latching SCP type with reverse polarity protection | DC models have non-latching short-circuit protection and reverse polarity protection;<br>AC/DC2W models are latching SCP type with reverse polarity protection |
| **Other** | Alternate frequency versions;<br>5 m or 10 m cable lengths;<br>Optional short circuit protection models;<br>Optional UL listed AC versions | Cordsets available 2M, 5M, 10M straight or 90's PVC with E-coated or SS coupling nuts;<br>PUR Black with E-coated or SS coupling nuts;<br>TPE coated cables with E-coated or SS coupling nuts | Cordsets available 2M, 5M, 10M straight or 90's PVC with E-coated or SS coupling nuts;<br>PUR Black with E-coated or SS coupling nuts;<br>TPE coated cables with E-coated or SS coupling nuts |
| **Application** | Use when IP68 rating is needed;<br>Use where metal barrels will corrode;<br>Standard distance inductive prox for ferrous metal sensing<br>DC3W or AC2W | Standard sensing distance;<br>Weld field immune inductive proximity sensors for automotive weld lines and extremely harsh environments | Extended sensing distance;<br>Weld field immune inductive proximity sensors for automotive weld lines and extremely harsh environments |

| | Inductive Proximity Sensors<br>Harsh Environment | | Miniature | |
|---|---|---|---|---|
| | | 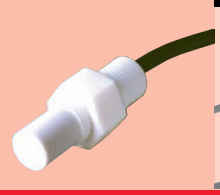 | | 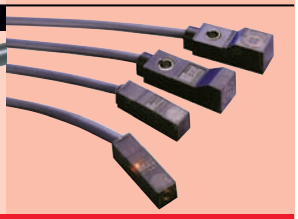 |
| | **E2EQ** | **E2KQ** | **E2EC** | **E2S** |
| **Product type** | Teflon-Coated Cylindrical Inductive | Teflon Cylindrical Capacitive | Subminiature Prox with In-Line Amp | Subminiature Rectangular Inductive Prox |
| **Dimensions mm (in)** | M12 x 38 (0.47 x 1.50)<br>M18 x 47 (0.71 x 1.85)<br>M30 x 56 (1.18 x 2.20) | M18 x 61.8<br>(0.71 x 2.43) | Dia. 3 x 12 (0.12 x 0.47)<br>Dia. 5.4 x 18 (0.21 x 0.71)<br>Dia. 8 x 18 (0.31 x 0.71)<br>M12 x 18 (0.47 x 0.71) | 5.5 x 5.5 x 19<br>(0.22 x 0.22 x 0.75)<br>7.4 x 8 x 23<br>(0.29 x 0.31 x 0.91)<br>8 x 8 x 26<br>(0.31 x 0.31 x 1.02) |
| **Features** | • Teflon-coated metal housing ensures high-tightening torque<br>• Prewired versions available<br>• Resistant to weld spatter<br>• DC 2-wire<br>• M12, M18, M30 barrel sizes<br>• Long sensing distance type available: 4 mm to 15 mm | • Oil-resistant cable<br>• Sensitivity adjustment allows sensing range from 6 to 10 mm<br>• Teflon mounting nuts and brass washers allow easy installation/maintenance | • Subminiature cylindrical inductive prox with in-line amplifier<br>• Robot cable for high-flex applications<br>• DC 2-wire version reduces wiring time<br>• Operation and stability indicator allows easy set-up and monitoring | • Extended sensing distances<br>• Economical large quantity OEM pricing<br>• Vacuum potted internal circuitry<br>• One-piece housing<br>• Stainless steel M8 barrel versions<br>• Wrench flats for easy installation<br>• Superior barrel thickness and highest tightening torques available<br>• Easily customized<br>• Pre-wired or connector versions |
| **Shielded sensing distances** | 3, 7, 10 mm (standard) | – | 0.5, 0.8, 1.5, 2.5, 3, 4 mm | 2, 4, 8, and 15 mm |
| **Unshielded sensing distances** | – | 6 to 10 mm | N/A | 4, 8, 16, 20, and 30 mm |
| **DC supply voltage** | 12 to 24 VDC | 12 to 24 VDC | 12 to 24 VDC | 12 to 24 VDC<br>(10-32 VDC operating) |
| **AC supply voltage** | – | – | N/A | N/A |
| **2-wire DC output** | NO; 100 mA max. | – | NO, NC; 100 mA max. | NO, NC; 50 mA max. |
| **3-wire DC output** | – | NPN-NO; 100 mA max. | NPN-NO, NPN-NC, PNP-NO, PNP-NC; 100 mA max.N/A | NPN-NO, NPN-NC, PNP-NO,PNP-NC; 50 mA max. |
| **AC 2-wire output** | – | – | N/A | N/A |
| **Response frequency** | 0.4 kHz, 0.5 kHz, 1 kHz | – | 1 kHz to 1.5 kHz | 1 kHz |
| **Connections** | PVC cable, 2 m<br>M12 Micro Change® connector | PVC cable, 2 m | Robotic Cable 2 m or optional 5 m;<br>Optional pigtail versions | 1 m cable standard |
| **Ambient operating temperature** | -13°F to 158°F | -13°F to 158°F | -13°F to 135°F | -13°F to 135°F |
| **Enclosure** | IEC: IP67 | IEC: IP66 | IEC: IP67 (IP64 for DC 3-wire);<br>NEMA: 1, 3, 4, 6, 12, 13<br>(for DC 2-wire only) | IEC: IP67 |
| **Agency approvals** | – | – | – | – |
| **Circuit protection** | Surge absorber and output short circuit | Reverse polarity connection and surge absorber | Surge absorber and output short circuit (DC 2-wire);<br>Surge absorber (DC 3-wire) | Reverse polarity connection and surge absorber |
| **Other** | – | – | Alternate frequency versions | Alternate frequency versions;<br>Front and end sensing models |
| **Application** | Automotive welding, machine tool | Oil and chemical resistant for use in metal cutting, chemical hardening and welding operations | Sub-miniature sensing head with in-line separate amplifier;<br>Use when space is confined;<br>Use in high-flex applications like robotic grippers;<br>DC2W or DC3W | Smallest rectangular sensor available;<br>Extremely economical;<br>Use when space is confined<br>DC2W or DC3W |

| | Inductive Proximity Sensors<br>Rectangular | Ring Sensor |
|---|---|---|
| | | 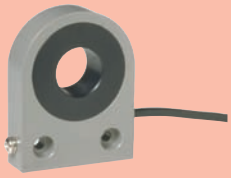 |
| | **TL-W** | **F2LP-W** |
| **Product type** | Miniature Rectangular Inductive | Ring-Shaped Inductive Sensing Head |
| **Dimensions mm (in)** | 27 x 10 x 6 (1.06 x 0.39 x 0.24);<br>30 x 18 x 10 (1.18 x 0.71 x 0.39);<br>50 x 25 x 10 (1.97 x 0.98 x 0.39);<br>53 x 40 x 23 (2.09 x 1.57 x 0.91); | Amp: 75 x 67.5 x 74 (2.95 x 2.66 x 2.91)<br>Sensors: 10 (0.39)<br>ID: 37 x 24 x 10<br>(1.46 x 0.94 x 0.39)<br>20 (0.79) ID: 65 x 50 x 16<br>(2.56 x 1.97 x 0.63)<br>50 (1.97) ID: 96 x 110 x 26<br>(3.78 x 4.33 x 1.02)<br>75 (2.95) ID: 155 x 130 x 40<br>(6.10 x 5.12 x 1.57)<br>100 (3.94) ID: 185 x 170 x 45<br>(7.28 x 6.69 x 1.77) |
| **Features** | • Space-saving, flat-pack DC sensor fits tight spaces<br>• Rugged diecast metal or low-profile plastic housing models available<br>• Mounts directly to metal base or rail<br>• DC 3-wire and DC 2-wire models | • Detects moving metal objects anywhere inside of the ring<br>• Separate amplifier, can be surface or track mounted<br>• Ideal for counting parts |
| **Shielded sensing distances** | 5 mm | 0.3, 2, 2.5, 3 mm min. |
| **Unshielded sensing distances** | 3, 5, 20 mm | – |
| **DC supply voltage** | 10 to 30 VDC | – |
| **AC supply voltage** | – | 120 to 240 VAC |
| **2-wire DC output** | – | – |
| **3-wire DC output** | NPN-NO, NPN-NC, PNP-NO,PNP-NC;<br>100 or 200 mA max. | – |
| **AC 2-wire output** | – | SPDT relay; 3A max.<br>NPN-NO; 100 mA max. |
| **Response frequency** | 40 Hz to 600 Hz | 75 to 125 ms between objects |
| **Connections** | 2 m cable standard | Amp: Screw terminals;<br>Sensors: 3 m cable standard |
| **Ambient operating temperature** | -13°F to 158°F | Amp: 14°F to 131°F<br>Sensors: -13°F to 158°F |
| **Enclosure** | IEC: IP67<br>NEMA: 1, 2, 3, 4X, 6, 12, 13 | IEC: IP67<br>(IP30 for amplifier) |
| **Agency approvals** | UL, CSA, CE | UL, CSA |
| **Circuit protection** | Reverse polarity connection and surge absorber (DC 3-wire); short circuit protection (DC 2-wire) | – |
| **Other** | – | Amplifier has 40 ms OFF delay and one-shot timing functions |
| **Application** | Space confined installations in conveyor rails, and end-of-travel and home position robotic applications | Small parts assembly, electronics assembly, automotive applications |

| | | | 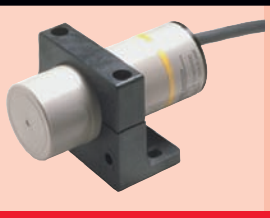 | |
|---|---|---|---|---|
| | **E2K-F** | **E2K-X** | **E2K-C** | **E2J** |
| **Product type** | Flat-Pack Rectangular Capacitive | Threaded Cylindrical Capacitive | Adjustable Cylindrical Capacitive | Adjustable Flat Rectangular Capacitive |
| **Dimensions mm (in)** | 50 x 20 x 10 (1.97 x 0.79 x 0.39) | M12 x 80 (0.47 x 3.15);<br>M18 x 80 (0.71 x 3.15);<br>M30 x 80 (1.18 x 3.15) | 34 Dia. x 82 (1.34 x 3.23) | Amp: 59 x 12 x 29<br>(2.32 x 0.47 x 1.14)<br>Sensors: 30 x 20 x 5.5<br>(1.18 x 0.79 x 0.22)<br>40 x 30 x 5.5<br>(1.57 x 1.18 x 0.22) |
| **Features** | • Flat, thin capacitive sensor fits space confined installations<br>• Ideal for mounting directly to metal walls<br>• Detects glass, plastic, wood, water, oil and metals<br>• Fixed distance or adjustable models | • Threaded-body sensors detect glass, wood, water oil, plastic and metal<br>• Fixed sensitivity for simple installation<br>• Operation indicator, all models<br>• AC 2-wire and DC 3-wire models | • Built-in amplifier allows adjustable detecting distances<br>• Allows indirect detection of objects inside non-metallic containers<br>• AC 2-wire and DC 3-wire models | • Separate amplifier with adjustable sensitivity<br>• Compact sensing heads<br>• Highly flexible robotic-grade cable<br>• DC 3-wire NPN open collector |
| **Shielded sensing distances** | – | – | – | – |
| **Unshielded sensing distances** | 10 mm | 4, 8, 15 mm | 3 to 25 mm adjustable | 10 mm, 20 mm |
| **DC supply voltage** | 10 to 30 VDC | 10 to 30 VDC | 10 to 40 VDC | 24 VDC |
| **AC supply voltage** | – | 90 to 250 VAC | 90 to 250 VAC | – |
| **2-wire DC output** | – | – | – | – |
| **3-wire DC output** | NPN-NO, NPN-NC;<br>100 mA max. | NPN-NO, NPN-NC,<br>PNP-NO,PNP-NC; 200 mA max. | NPN-NO, NPN-NC, PNP-NO,<br>PNP-NC; 200 mA max. | NPN-NO/NC; 100 mA max. |
| **AC 2-wire output** | – | NO, NC; 200 mA max. | NO, NC; 200 mA max. | – |
| **Response frequency** | 100 Hz | 10 Hz to 100 Hz | 10 Hz to 70 Hz | 70 Hz |
| **Connections** | 3 m cable standard | 2 m cable | 2 m cable | Amp: 2 m cable;<br>Sensor: 1 m cable |
| **Ambient operating temperature** | 14°F to 131°F | -13°F to 158°F | -13°F to 158°F | 14°F to 131°F |
| **Enclosure** | IEC: IP66<br>NEMA: 1, 4, 12, 13 | IEC: IP66<br>NEMA: 1, 4, 12, 13 | IEC: IP66<br>NEMA: 1, 4, 12, 13 | IEC: IP66<br>(IP50 for amplifier) |
| **Agency approvals** | – | UL | UL | – |
| **Circuit protection** | Reverse polarity connection | AC2W: Surge absorber; DC3W: Reverse polarity connection and surge absorber | AC2W: Surge absorber; DC3W: Reverse polarity connection and surge absorber | Output short circuit, surge absorber, reverse polarity connection |
| **Other** | New adjustable sensing distance models available | – | Mounting bracket included | – |
| **Application** | Sensing non-metallic target, ideal for semiconductor and plastics, level control applications | General purpose type for plastics, level control | Tank sight glass for level control;<br>non-metallic container fill inspection | Ideal for robot hands and various built-in applications for material handling and assembly verification such as CD-ROMs in jewel cases |

# Limit Switches

## Omron Smart Solutions

### D44-N

*Heavy-duty, general-purpose limit switches feature plug-in construction for easy installation and long service life.*

### D4CC

*Compact enclosed switch is triple sealed for reliable operation, and comes connector-ready for quick servicing or replacement without rewiring.*

*Enclosed limit switch with large breaking capacity with wide range of actuators, also available in sealed versions.*

### ZE/ZV/ZV2

| | | | |
|---|---|---|---|
| | **D4A-N** | **WL** | **D4C** |
| **Dimensions mm (in)** | 104.5 H x 42.0 W x 44 D<br>(4.11 x 1.65 x 1.73) | 94.1 H x 40.0 W x 41.5 D<br>(3.70 x 1.57 x 1.63) | 55 H x 40 W x 16 D<br>(2.17 x 1.58 x 0.63) |
| **Features** | • Heavy-duty, general-purpose limit switch<br>• Convenient plug-in construction for easy installation and field maintenance<br>• Waterproof and oil-tight | • **CE approved**<br>• General-purpose single pole/double break limit switch<br>• Wide variety of standard, high-precision and overtravel types<br>• Waterproof, oil-tight and dust-proof construction | • **CE approved**<br>• Compact, high-precision prewired enclosed limit switch<br>• Slim-line body design ideal for limited access areas and gang mounting |
| **Switching capacity** | 10 A continuous – 120, 240, 480, 600 VAC, NEMA A600 (SPDT without indicator); 10 A continuous - 120, 240 VAC NEMA A300 (SPDT with indicator); 5 A continuous – 120, 240, 480 600 VAC NEMA B600 (DPDT, without indicator) | 10 A, 125 VAC inductive load; NEMA A600 | 5 A, 125 VAC, resistive load; NEMA B300 |
| **Contact configuration** | SPDT or DPDT double break | SPDT double break | SPDT (form C) |
| **Mechanical service life (operations)** | 50 million minimum (SPDT); 30 million minimum (DPDT) | 15 million minimum | 10 million minimum |
| **Connection** | 1/2-14 NPT conduit entrance, terminal screws | 1/2-14 NPT conduit entrance, terminal screws | Prewired with 3 meters (9.8 ft.) cable |
| **Enclosure rating** | UL 3, 4, 4X, 6P and 13; NEMA 1, 2, 3, 3R, 4X, 5, 6P, 12 and 13; IP67 | UL 3, 4 and 13; NEMA 1, 2, 3, 3R, 4X, 5 6P, 12 and 13; IP67 | UL 3, 4 and 13; NEMA 1, 3, 3R, 4, 5, 6, 12 and 13; IP67 |
| **Actuators** | Side rotary, use separate levers; Plain side plunger; Vertical side roller plunger; Horizontal side roller plunger; Adjustable side plunger; Plain top plunger; Top roller plunger; Adjustable roller plunger; Spring wire wobble lever; Plastic rod wobble lever; Cat whisker wobble lever; Coil spring wobble lever | Short, medium and long roller levers; Flush mounting roller lever; Flange mounting roller lever; Adjustable roller lever; Adjustable rod lever; Fork roller levers; Plain top plunger; Top roller plunger; Top ball plunger; Plain side plunger; Side roller plunger; Side ball plunger; Steel wire wobble lever; Nylon rod wobble lever; Coil spring wobble levers | Pin plunger; Sealed plunger; Roller plunger; Sealed roller plunger; Crossroller plunger; Sealed cross roller plunger; Bevel plunger; Coil spring; Roller lever |

| | Limit Switches | | |
|---|---|---|---|
| | | | |
| | **D4CC** | **ZE/ZV/ZV2** | **ZC** |
| **Dimensions mm (in)** | 73.2 H x 40 W x 16 D<br>(2.88 x 1.58 x 0.63) | 102.1 H x 25.4 W x 86 D<br>(4.02 x 1.00 x 3.39) | 65.4 H x 21.5 W x 60 D<br>(2.58 x 0.85 x 2.36) |
| **Features** | • Compact, connector-ready enclosed limit switch<br>• Triple sealed construction<br>• Quickly replace or service the switch without rewiring | • Enclosed limit switch with a large breaking capacity<br>• Choose among side-mounting (ZE), diagonal side mounting (ZV2) and base-mounting (ZV) housings | • Ideal for gang mounting<br>• Small high-precision limit switch that responds to small operating force<br>• Models available with rubber seal boot to protect the actuator |
| **Switching capacity** | 1 A, 125 VAC resistive load;<br>1 A, 30 VDC resistive load | 15 A, 125 VAC, inductive load | 10 A, 125 VAC, inductive load; NEMA A300 |
| **Contact configuration** | SPDT (form C) | SPDT (form C) | SPDT (form C) |
| **Mechanical service life (operations)** | 10 million minimum | 10 million minimum | 10 million minimum |
| **Connection** | Accepts Omron's Y96E or Brad Harrison MicroChange™ connector cordsets | 1/2-14 NPT conduit entrance, terminal screws | Terminal screws or prewired with 1 m (3.28 ft) cable |
| **Enclosure rating** | UL 3, 4 and 13 (pending for DC types); NEMA 1, 3, 3R, 4, 5, 6, 12 and 13; IP67 | NEMA 1, 2, 3, 4, 5, (-N type); 1 (-Q type); IP60 (-Q); IP65 (-N) | NEMA 1, 2, 3, 4, 5, 13; IP67 |
| **Actuators** | Center rotary roller lever; Pin plunger; Roller plunger; Crossroller plunger; Bevel plunger; Low operating force roller lever; Sealed plunger; Sealed roller plunger; Sealed crossroller plunger; Panel mount pin plunger; Panel mount roller plunger; Panel mount crossroller plunger; Plastic rod lever | Top plunger; Roller plunger; Crossroller plunger; Roller arm lever; One-way action arm lever; Rod lever; Coil spring (ZE, ZV); Maintained contact plunger (ZE, ZV); **Sealed versions of all actuators available** | Pin plunger; Panel mount plunger; Panel mount roller plunger; Panel mount cross roller plunger; Sealed roller plunger; Sealed cross roller plunger; Short hinge lever; Hinge lever; Short hinge roller lever; Hinge roller lever; One-way action short hinge roller lever; One-way action hinge roller lever |

# Other Sensor Solutions

## Omron Smart Solutions

### Pressure

*Compact sensors with or without digital displays help monitor gauge pressure, vacuum and differential pressure conditions.*

*Detect products regardless of color, texture or glossiness at long range. Also detects powder in storage tanks.*

### Ultrasonic

### Encoders

*Incremental and absolute encoders provide reliable positioning feedback for motors, lifts and other rotating equipment.*

| | Pressure Sensors | | |
|---|---|---|---|
| | | | |
| | **E8Y** | **E8F2** | **E8M/E8MS** |
| **Dimensions mm (in)** | 31 x 30 x 29.8<br>(1.22 x 1.18 x 1.17) | 28 x 28 x 29<br>(1.10 x 1.10 x 1.14) | 29.7 H x 15 dia. (max.)<br>(1.17 x 59 dia. [max.])<br>26 H x 19 W x 42.5 D<br>(1.02 X 0.75 X 1.67)<br>31 H x 27.5 dia.<br>(1.22 x 1.08) |
| **Features** | • Cube, miniature package<br>• Easy-to-read LED display<br>• Programmable teach modes<br>• **CE approved** | • Mini-cube<br>• Miniature and light weight<br>• Digital and analog display<br>• **CE approved** | • Miniature<br>• Separate controller<br>• Small and light weight<br>• Programmable multi-channel outputs |
| **Display units** | psi or kPa | kPa, torr, psi | E8M = None, K3C = kPa, kgf/cm2, mmHg, $mmH_2O$ |
| *Pressure range available* | | | |
| **Differential pressure** | 0 to 0.29 psi (0 to 2 kPa)<br>0 to 0.725 psi (0 to 5 kPa) | – | 0 to 0.145 psi (0 to 1kPa) [E8M-A1] |
| **Positive pressure** | – | 0 to 14.5 psi (0 to 100 kPa)<br>0 to 145 psi (0 to 1 MPa) | 0 to 14.5 psi (0 to 100kPa) [E8MS-01]<br>0 to 145 psi (0 to 1MPa) |
| **Negative pressure** | – | 0 to -14.6 psi (0 to -101 kPa) | 0 to -14.5 psi (0 to -101kPa) |
| **Applicable material** | Non-corrosive, non-flammable gases or air | Non-corrosive, non-flammable gases or air | Non-corrosive, non-flammable gases or air |
| **Pressure port** | 4.5 mm dia. resin pipe or NPT 1/8 | NPT 1/8 or M5 | PT 1/8 or M5 |
| **Supply voltage** | 12 to 24 VDC | 12 to 24 VDC | 12 VDC sensor, 24 VDC controller |
| *Output* | | | |
| **Analog** | 4 to 20 mA | 1 to 5 V | 1 to 5 V |
| **On / Off** | 100 mA, NPN open collector | 30 mA, NPN open collector | 30 mA, NPN open collector |
| **Enclosure** | IP40 | IP50 | IP50 |

| | E8CB | E8CC | E8EB |
|---|---|---|---|
| | | | |
| **Dimensions mm (in)** | 15 x 26.8 x 52.5 (0.59 x 1.06 x 2.07) | 15 x 29.5 x 67 (0.59 x 1.16 x 2.64) | 17.5 x 30 x 44 (0.69 x 1.18 x 1.73) |
| **Features** | • Flat pack<br>• Slim package, just 15 mm wide<br>• Two-turn pressure adjustment | • Display flat pack<br>• Slim package – 15 mm wide<br>• DIN rail mount compatible<br>• LCD display | • General purpose<br>• Analog and digital outputs<br>• NPN and PNP outputs available |
| **Display units** | None | kPa, kgf/cm$^2$, cmHg | None |
| *Pressure range available* | | | |
| **Differential pressure** | – | – | – |
| **Positive pressure** | 0 to 14.2 psi (0 to 98 kPa) | 0 to 14.2 psi (0 to 98 kPa)<br>0 to 142.1 psi (0 to 980 kPa) | 0 to 14.2 psi (0 to 98 kPa)<br>0 to 142.1 psi (0 to 980 kPa) |
| **Negative pressure** | 0 to -14.6 psi (0 to -101 kPa) | 0 to -14.6 psi (0 to -101 kPa) | 0 to -14.2 psi (0 to -98 kPa) |
| **Applicable material** | Non-corrosive, non-flammable gases or air | Non-corrosive, non-flammable gases or air | Non-corrosive, non-flammable gases or air |
| **Pressure port** | NPT 1/8 or M7 | NPT 1/8 or M8 | NPT 1/8 |
| **Supply voltage** | 12 to 24 VDC | 12 to 24 VDC | 24 VDC |
| *Output* | | | |
| **Analog** | 1 to 5 V | 1 to 5 V | 1 to 5 V |
| **On / Off** | 80 mA, NPN open collector | 80 mA, NPN open collector | 80 mA, NPN or PNP open collector |
| **Enclosure** | IP50 | IP50 | IP54 |

| | E6A2 | E6B2 | E6C2-C | E6C3-CWZ□□H |
|---|---|---|---|---|
| | | | | |
| **Dimensions mm (in)** | 25 dia. x 29 L (0.98 x 1.14) | 40 dia. x 39 L (1.57 x 1.54) | 50 dia. x 60 L (1.97 x 2.36) | 50 dia. x 38 L (1.97 x 1.50) |
| **Shaft diameter mm (in)** | 4 (0.16) | 6 (0.24) | 6 (0.24) | 8 (0.32) |
| **Type** | Incremental | Incremental | Incremental | Incremental |
| **Features** | • CE approved miniature sized encoder<br>• Small operating torque<br>• Ideal for small and high-density equipment<br>• Zero index function for positioning applications available | • CE approved<br>• Ideal for most general-purpose applications<br>• Extended signal transmission distances<br>• Zero phase can be easily adjusted using origin indicating function<br>• Line driver output available | • Drip-proof construction<br>• Shaft withstands heavy loads, 5 kgf radially, 3 kgf thrust (axially)<br>• Short circuit protection<br>• Space-saving, A-slant cable protrusion for ease of mounting | • CE approved and available with complimentary outputs for interfacing to NPN or PNP inputs<br>• Drip-proof construction<br>• Surge protection<br>• Ideal for tough environments |
| **Resolution** | 10 to 360 pulses/revolution | 10 to 2,000 pulses/revolution | 10 to 2,000 pulses/revolution | 100 to 3,600 pulses/revolution |
| **Output phase(s)** | Output A; Outputs A & B (100, 200 pulses/rev only); Outputs A, B & Z (100, 200 pulses/rev only) | Outputs A, B and Z (reversible) | Outputs A, B, and Z (reversible) Line driver $A\bar{A}$, $B\bar{B}$, and $Z\bar{Z}$ | Outputs A, B and Z (reversible) |
| **Output phase difference** | 90°±45° | 90°±45° | 90°±45° | 90°±45° |
| **Maximum response frequency** | 300 kHz (30,000 pulses/sec) | 100 kHz (100,000 pulses/sec) | 100 kHz (100,000 pulses/sec) | 100 kHz (100,000 pulses/sec) |
| **Maximum rpm** | 5,000 rpm | 3,000 rpm | 6,000 rpm | 6,000 rpm |
| **Supply voltage** | 5 to 12 VDC, 12 to 24 VDC | 5 to 12 VDC; 5 to 24 VDC; 5 VDC | 5 to 12 VDC; 5 to 24 VDC; 5 VDC; 12 to 24 VDC | 5 to 24 VDC |
| **Current consumption** | 50 mA max. | 50 mA max. | 160 mA max. | 100 mA |
| **Output form and capacity** | 2 kΩ output impedance (voltage output); 30 mA (NPN open collector output) | 2 kΩ output impedance (voltage output); 35 mA (NPN open collector output); -20 to 20 mA (line driver) | 35 mA max. (NPN or PNP open collector); 2 kΩ output impedance (voltage output); -20 to 20 mA (line driver) | 35 mA max. (NPN or PNP open collector) |
| **Shaft loading: radial** | 1 kgf (7.2 ft-lbs.) | 3 kgf (21.7 ft-lbs.) | 5 kgf (11.0 ft-lbs.) | 80 N |
| **Shaft loading: axial** | 0.5 kgf (3.6 ft-lbs.) | 2 kgf (14.5 ft-lbs.) | 3 kgf (21.7 ft-lbs.) | 50 N |
| **Starting torque** | 10 g-cm (0.14 oz.-inch) | 10 g-cm (0.14 oz.-inch) | 100 gf x cm (9.8 mN x m) max. (7.2 m ft x lbf) | 100 g-cm (1.39 oz.-inch) |
| **Degree of protection: IEC 144** | IP50 | IP50 | IEC IP64 | IEC60925 IP65 |
| **Ambient operating temperature** | -10° to 55°C (14° to 131°F) | -10° to 70°C (14° to 158°F) | -10° to 70°C (14° to 158°F) with no icing | -10° to 70°C (14° to 158°F) |
| **Shaft coupler** | E69-C04B supplied; two 4 mm dia. shafts | E69-C06B supplied, two 6 mm dia. shafts. Optional couplers for 8 and 10 mm dia. shafts | Order separately. E69-C06B 6 mm; E69-C68B 6 to 8 mm; E69-C06M metal 6 mm | Order separately. Choose E69-C08B for the 8 mm dia. shaft |

| | | | | |
|---|---|---|---|---|
| | **E6D** | **E6C3-A** | **E6CP** | **E6F** |
| **Dimensions mm (in)** | 55 dia x 50 L (2.17 x 1.97) | 50 dia. x 38 L (1.97 x 1.50) | 56 dia. x 50 L (2.21 x 1.97) | 60 dia. x 60 L (2.36 x 2.36) |
| **Shaft diameter mm (in)** | 6 (0.24) | 8 (0.32) | 6 (0.24) | 10 (0.39) |
| **Type** | Incremental | Absolute | Absolute | Absolute |
| **Features** | • Super accuracy and high response frequency | • CE approved and now available with PNP outputs for interfacing to allow more flexible interfacing to other devices<br>• High resistance to shock<br>• Drip-proof construction<br>• Heavy duty absolute encoder | • Reliable 8-bit resolution and gray code binary output | • Gray code binary output with 8-bit resolution or BCD output with 10-bit resolution<br>• Direct connections to high-speed counters, position control modules for PLCs or Omron's H8PS cam positioner |
| **Resolution** | 720 to 6,000 pulses/revolution | 256, 360, 720, 1,024 pulses/ revolution | 256 pulses/revolution | 256 or 360 pulses/revolution |
| **Output phase(s)** | Outputs A, B, and Z (reversible) | Gray code | Gray code binary | Gray code binary or BCD (detects in gray-codes; converts to BCD) |
| **Output phase difference** | 90°±25° | – | – | – |
| **Maximum response frequency (pulses per second)** | 200 kHz (200,000 pulses/sec) | 20 kHz (20,000 pulses per second) | 5 kHz (5,000 pulses per second) | 5 (E6F-AB3C) or 10 (E6F-AG5C) kHz (5,000 or 10,000 pulses per sec.) |
| **Maximum rpm** | 12,000 rpm | 5,000 rpm | 1,000 rpm | 5,000 rpm |
| **Supply voltage** | 5 VDC (voltage output); 12 VDC (open collector output) | 12 to 24 VDC | 5 to 12 VDC (A6CP-AG3C); 12 to 24 VDC (E6CP-AG5C) | 5 to 12 VDC (E6F-AB3C); 12 to 24 VDC (E6F-AG5C) |
| **Current consumption** | 150 mA max. | 70 mA | 90 mA max. (A6CP-AG3C); 70 mA (E6CP-AG5C) | 50 mA max (E6F-AB3C); 70 mA (E6F-AG5C) |
| **Output form and capacity** | 35 mA max. (voltage and NPN open collector output) | 35 mA (NPN and PNP open collector) | 16 mA (NPN open collector transistor) | 35 mA (NPN open collector transistor) |
| **Shaft loading: radial** | 5 kgf (36.2 ft-lbs.); 2 kgf (14.5 ft-lbs.) typical | 80 N | 3 kgf (21.7 ft-lbs.) | 10 kgf (72.3 ft-lbs.) |
| **Shaft loading: axial** | 3 kgf (21.7 ft-lbs.); 1 kgf (7.2 ft-lbs.) typical | 50 N | 2 kgt (14.5 ft-lbs.) | 3 kgf (21.7 ft-lbs.) |
| **Starting torque** | 100 g-cm (1.39 oz.-inch) | 100 g-cm (1.39 oz.-inch) | 10 g-cm (0.14 oz.-inch) | 100 g-cm (1.39 oz.-inch) |
| **Degree of protection: IEC 144** | IP50 | IEC60925 IP65 | IP50 | IP52 |
| **Ambient operating temperature** | -10° to 70°C (14 to 158°F) | -10° to 70°C (14° to 158°F) | -10° to 70°C (14 to 158°F) | -10° to 70°C (14° to 158°F) |
| **Shaft coupler** | E69-C06B supplied, two 6 mm dia. shafts | Order separately. Choose E69-C08B for the 8 mm dia. shaft | E6CP-AG3C - E-69-C06B supplied, two 6 mm dia. shafts. Optional couplers for 8 and 10 mm dia. shafts. E6CP-AG5C – Order separately. Choose 6 mm dia. couplers for 6, 8, 10 mm dia. shafts | 2 options: For E6F-AG5C, order sep. Choose 6 mm dia. couplers for 6, 8 & 10 mm dia. shafts. For E6F-AB3C, E69-CO6B supplied, Two 6 mm dia. shafts. Optional couplers for 8 & 10 mm dia. shafts |

ULTRASONIC

| | E4A | E4B | E4C | E4E | E4R |
|---|---|---|---|---|---|
| | | | | | |
| **Dimensions mm (in)** | 104 H x 50 W x 150 D (4.09 x 1.97 x 5.91) | 61 H x 35 W x 79 D (2.40 x 1.38 x 3.11) | 18 Dia. x 75 L (0.71 x 2.95) | 36 H x 18 W x 25 D (1.42 x 0.71 x 0.98) | 80 H x 46 W x 52D (3.15 x 1.81 x 2.05) |
| **Amplifier type** | Built-in amplifier | Built-in amplifier | Separate amplifier | Built-in amplifier | Separate amplifier |
| **Features** | Ultrasonic reflective; Mutual interference protection; Clear material detection; Photo sensitive film sensing | Ultrasonic through-beam and reflective; Narrow 8 degree beam; Zone and setting distance models | Ultrasonic through-beam and reflective; Compact threaded body; Mutual interference protection; Zone setting mode | Extremely compact self-contained ultrasonic sensor; Through-beam; Separate NO and NC models | Ultrasonic reflective sensor; Wide beam angle for granular and high viscosity materials |
| *Detection method and sensing distance* | | | | | |
| **Through-beam type** | – | 1 m, 500 mm | 500 mm | 300 mm | – |
| **Reflective** | 0.3 to 3 m | 200 to 700 mm, 50 to 200 mm | 100 to 350 mm | – | 2.5 m |
| **Supply voltage** | 120 and 240 VAC 12 to 24 VDC | 12 to 24 VDC | 12 to 24 VDC | 12 to 24 VDC | 12 VDC |
| *Control outputs* | | | | | |
| **AC** | 3 A Relay, SPDT | – | – | – | 4 A Relay, SPDT |
| **DC** | – | 100 mA NPN or PNP open collector | 100 mA, NPN/PNP open collector, selectable | 100 mA, NPN open collector, NO or NC | – |
| **Alarm** | – | – | – | – | – |
| **Response time** | 250 ms | 10 ms | 10 ms (200 Hz) | 25 ms | 150 ms |
| **Materials** | Plastic, ABS | Plastic, ABS | Plastic, ABS | Plastic, ABS | Plastic, ABS |
| **Enclosure rating** | IP60 | IP66 | IP66 sensor; IP40 amp. | IP66 | IP10 |

# Pushbuttons, Switches and Pilot Devices

## Omron Smart Solutions

### Pushbuttons

*Easy-to-install illuminated and non-illuminated switches are available with momentary and alternate action types.*

### Switches

*Selector switches and key switches are available in two- and three-position versions.*

### Pilot Devices

*Indicator lights and buzzers help operators monitor status effectively.*

## Non-Illuminated

| Shape | Pushbutton | | | | | | | | Selector Switch |
|---|---|---|---|---|---|---|---|---|---|
| Part number | Round Flush A22-F | Round Extended A22-T | Round Full-Guard A22-G | Round Half-Guard A22-H | 30 mm Mushroom A22-S | 40 mm Mushroom A22-M | Square Extended A22-C | Square Full-Guard A22-D | 2- or 3-position knob A22S |
| Appearance | | | | | | | | | |
| Color | ◆◆◆◆◆◆ | ◆◆◆◆◆◆ | ◆◆◆◆◆◆ | ◆◆◆◆◆◆ | ◆◆◆◆◆◆ | ◆◆◆◆◆◆ | ◆◆◆◆◆◆ | ◆◆◆◆◆◆ | ◆ |

| Shape | Selector Switch Extended Lever | Key Switch | Emergency Stop | | | | | | |
|---|---|---|---|---|---|---|---|---|---|
| Part number | 2- or 3-position knob A22S | 2- or 3-position knob A22K | Push-pull 40 mm dia. A22E-MP | Push-pull 60 mm dia. A22E-LP | Push-lock, turn-reset 30 mm dia. A22E-S | Push-lock, turn-reset 40 mm dia. A22E-M | Push-lock, turn-reset 60 mm dia. A22E-L | Push-lock, key-reset 30 mm dia. A22E-SK | Push-lock, key-reset 40 mm dia. A22E-MK |
| Appearance | | | | | | | | | |
| Color | ◆ | ◆ | ◆ | ◆ | ◆ | ◆ | ◆ | ◆ | ◆ |

## Illuminated

| Shape | Pushbutton | | | | | Selector Switch | Pilot Light | | Emergency Stop |
|---|---|---|---|---|---|---|---|---|---|
| Part number | Round Extended A22L-T | Round Half-Guard A22L-H | Round Full-Guard A22L-G | Square Extended A22L-C | Square Full-Guard A22L-D | 2- or 3-position knob A22W | Round M22-F | Square M22-C | Push-lock, turn-reset 40 mm dia. A22EL-M |
| Appearance | | | | 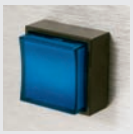 | | | | | |
| Color | ◆◆◆◆◆ | ◆◆◆◆◆ | ◆◆◆◆◆ | ◆◆◆◆◆ | ◆◆◆◆◆ | ◆◆◆◆◆ | ◆◆◆◆◆ | ◆◆◆◆◆◆ | ◆ |

# 16 mm Pushbuttons, Switches and Pilot Devices

## Non-Illuminated

| Shape | Pushbutton | | | Selector Switch | | | Key Switch | | |
|---|---|---|---|---|---|---|---|---|---|
| | Round | Square | Rectangle | Round 2- or 3-position knob | Square 2- or 3-position knob | Rectangular 2- or 3-position knob | Round 2- or 3-position knob | Square 2- or 3-position knob | Rectangular 2- or 3-position knob |
| Part number | A165-T | A165-A | A165-J | A165S-T | A165S-A | A165S-J | A165K-T | A165K-A | A165K-J |
| Appearance | | | 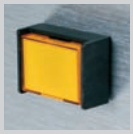 | | | | | | |
| Color | ◆◆◆◆◆◆ | ◆◆◆◆◆◆ | ◆◆◆◆◆◆ | ◆ | ◆ | ◆ | ◆ | ◆ | ◆ |

| Shape | Buzzer | Emergency Stop |
|---|---|---|
| | Rectangular Standard and high sound | Push-lock, turn-reset |
| Part number | M2BJ | A165E-S |
| Appearance | | |
| Color | ◆ | ◆ Also available: 40 mm dia. A165E-M |

**NOTE:**
A16 - IP40
A165 - IP65 oiltight

## Illuminated

| Shape | Pushbutton | | | Selector Switch | | |
|---|---|---|---|---|---|---|
| | Round | Square | Rectangle | Round 2- or 3-position knob | Square 2- or 3-position knob | Rectangular 2- or 3-position knob |
| Part number | A165L-T | A165L-A | A165L-J | A165W-T | A165W-A | A165W-J |
| Appearance | | 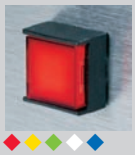 | | | | 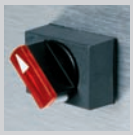 |
| Color | ◆◆◆◆◆ | ◆◆◆◆◆ | ◆◆◆◆◆ | ◆◆◆ | ◆◆◆ | ◆◆◆ |

| Shape | Pilot Lights | | | Emergency Stop |
|---|---|---|---|---|
| | Round | Square | Rectangle | Push-lock, turn reset 30 mm dia. |
| Part number | M165-T | M165-A | M165-J | A165E-LS |
| Appearance | | 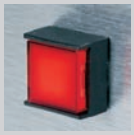 | | |
| Color | ◆◆◆◆◆ | ◆◆◆◆◆ | ◆◆◆◆◆ | ◆ Also available: 40 mm dia. A165E-LM |

**NOTE:**
A16 - IP40
A165 - IP65 oiltight

# Power Supplies

## Omron Smart Solutions

S8VS

*Slim DIN track-mounting power supplies from 15 to 240 W are UL508 listed for operation at full rating. Digital display and preventive maintenance output available for load duration and power supply service life.*

S82K

*Versatile power supplies offer 3 W to 100 W output in a wide range of voltages for general industrial applications. DIN track and bolt-on mounting.*

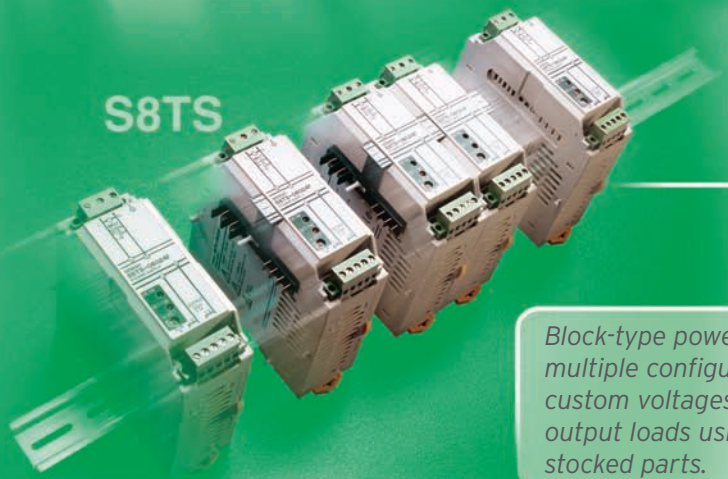

S8TS

*Block-type power supply allows multiple configurations for custom voltages or mixed output loads using a few easily stocked parts.*

| | S8VS | S82K | S8PS | S8TS |
|---|---|---|---|---|
| | | 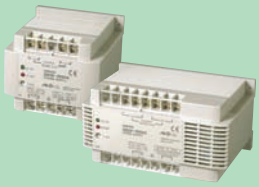 | | |
| **Features** | • Small sized, DIN rail mount power supply with LED display<br>• Suitable for any application and any environment<br>• Digital displays to predict and schedule maintenance for improved uptime | • DIN rail mount power supply with a wide power range<br>• Suitable for general purpose and rugged industrial applications<br>• Lightweight for easy DIN rail mount installation | • Compact DIN rail mounting industrial power supply with high power capacity<br>• Slim metal housing designed for rugged industrial application<br>• A versatile unit that could be installed in many different ways | • High-end, block type power supply easily connects with multiple units and offers many output configurations<br>• Ideal for applications where increase of power may be required |
| **Mounting** | DIN rail | DIN rail / Bolt-on | DIN rail / Bolt-on | DIN rail |
| **Product type** | Enclosed frame with metal and plastic housing | Enclosed frame with plastic housing | Open or covered frame with metal housing | Plastic housing, block-style configuration |
| **Output** | Single output | Single and dual output | Single output | Configures to user's choice |
| **Power ratings** | 15, 30, 60, 90, 120, 180 and 240 W | 3, 7.5, 15, 30, 50, 90 and 100 W | 50, 100, 150, 300 and 600 W | 25 W, 30 W, and 60 W per single unit;<br>Expandable up to 240 W by ganging the units together |
| **Output voltage/current** | 24 V: 2.5 A, 3.75 A, 5 A, 7.5 A, 10 A | 5 V: 0.6A, 1.5A, 2.5A, 5.0A;<br>12 V: 0.25A, 0.6A, 1.2A, 2.5A;<br>15 V: 0.2A, 0.5A; 24 V: 0.13A, 0.3A, 0.6A, 1.3A, 2.1A, 3.75A, 4.2A, ±12 V/+0.3/-0.2A;<br>±15 V/+0.2/-0.2A | 5 V: 10 A; 12 V: 4.2 A;<br>24 V: 2.1 A, 4.5 A, 6.5 A, 14 A, 27 A | 5 V: 5 A, 12 V: 2.5 A,<br>24 V: 2.5 A (this is per unit values);<br>When ganged together, values could go up to<br>12 V: 10 A, 24 V: 10 A |
| **Input voltage** | 85 to 264 VAC,<br>47 to 450 Hz | 85 to 264 VAC,<br>47 to 450 Hz;<br>85 to 132 VAC,<br>170 to 264 VAC (selectable),<br>85 to 253 VAC,<br>47 to 450 Hz (selectable) | 85 to 264 VAC,<br>47 to 450 Hz | 85 to 264 VAC,<br>47 to 63 Hz |
| **Dimensions mm (in)** | 60 W:<br>95 H x 40 W x 108.3 D<br>(3.74 x 1.57 x 4.26)<br>90 W:<br>115 H x 50 W x 121.3 D<br>(4.53 x 1.97 x 4.78)<br>120 W:<br>115 H x 50 W x 121.3 D<br>(4.53 x 1.97 x 4.78)<br>180 W:<br>115 H x 75 W x 125.3 D<br>(4.53 x 2.95 x 4.93)<br>240 W:<br>115 H x 100 W x 125.3 D<br>(4.53 x 3.94 x 4.93) | 3 W, 7.5 W:<br>75 H x 37.5 W x 65 D<br>(2.95 x 1.48 x 2.56);<br>15 W:<br>75 H x 45 W x 96 D<br>(2.95 x 1.77 x 3.78);<br>30 W, 50 W:<br>75 H x 90 W x 96 D<br>(2.95 x 3.54 x 3.78);<br>90 W, 100 W:<br>75 H x 145 W x 96 D<br>(2.95 x 5.71 x 3.78) | 50 W:<br>85 H x 40 W x 127 D<br>(3.35 x 1.57 x 5.0);<br>100 W:<br>92 H x 50 W x 145 D<br>(3.62 x 1.97 x 5.71);<br>150 W:<br>92 H x 50 W x 163 D<br>(3.62 x 1.97 x 6.42);<br>300 W:<br>92 H x 110 W x 175 D<br>(3.62 x 4.33 x 6.89);<br>600 W:<br>92 H x 170 W x 179 D<br>(3.62 x 6.69 x 7.05) | 120 H x 43 W x 120 D<br>(4.72 x 1.69 x 4.72) |
| **Display/indication** | 3-digit, 7-segment LED; LED status displays for output voltage, output current, peak current, lifetime years, run time hours | Two LED lights; one for power-on indicator and the other for output-on indicator | LED light for output-on indicator | Two LED lights; one for power-on indicator and the other for output-on indicator |
| **Alarm output** | 90, 120, 180, 240 W models with display have NPN outputs | Relay output available on 90 and 100 W models. | None | NPN output for when the output voltage drops |
| **Approvals** | cULus, UL508 listed, Class 2 output (60 W only), CE, SEMI F47-0200 | UL508 listed, Class 2 output (up to 90 W), CSA, CE | UL508 listed, CSA, VDE, CE | cULus, UL508 listed, VDE, CE |

# Timers, Counters, and Panel Meters

## Omron Smart Solutions

*Digital multifunction timer in 1/16 DIN size has a shallow mounting depth and NEMA 4/IP66 front panel without additional protection. Bi-color present value display can change from red to green to alert changes in output status.*

*Digital 1/16 DIN counter with preset, total, batch and dual counting functions offers bi-color display to alert changes in output status. NEMA 4/IP66 front panel needs no additional protection.*

### H5CX Timers

### H7CX Counters

### Digital Panel Meters

*Display the results of analog inputs and get control outputs indicating good/no good status with Omron's 1/8 DIN size process, temperature, rate and weight meters.*

2245120946412 04324624987783467429 64-284820475940894753 46

| | H5CX | H3CA | H5BR | H3CR-A | H3CR-F |
|---|---|---|---|---|---|
| | | | | | |
| **Dimensions mm (in)** | 48 H x 48 W x 100 D (1.89 x 1.89 x 3.94) | 48 H x 48 W x 63.7 D (1.89 x 1.89 x 2.51) | 72 H x 72 W x 100 D (2.83 x 2.83 x 3.94) | 48 H x 48 W x 68 D (1.89 x 1.89 x 2.68) | 48 H x 48 W x 66 D (1.89 x 1.89 x 2.62) |
| **Features** | • Advanced programmable display with twin timer function<br>• PNP/NPN input<br>• Programmable via front or dip switches on back<br>• NEMA 4 front | • Digital set, solid-state timer<br>• LCD time remaining bar graph and output status indicators<br>• Switch selectable time unit, control mode and time limit setting<br>• 1/16 DIN plug-in unit | • Batch counting function records the number of completed cycles<br>• Nine field-selectable timing modes<br>• Scroll-through menus access from front panel | • Shallow mounting depth and wide range of panel covers<br>• Analog set, 1/16 DIN sized solid-state timer<br>• NPN/PNP input<br>• Wide AC/DC supply voltage | • Analog set, solid-state timer with combinations of independent ON/OFF time settings in a compact 1/16 DIN size<br>• Models with ON start or OFF start operating functions<br>• Fits standard 8- or 11-pin sockets |
| **Product type** | Multi-mode | ON-delay/Multi-mode | Multi-mode | ON-delay and one-shot Interval/Multi-mode | Twin timer |
| **Control outputs** | Time limit - SPDT, 5A at 250 VAC, Transistor, NPN, 100 mA at 30 VDC | Time limit - DPDT or SPDT, 3A 250 VAC; Instantaneous - SPDT, 3A, 250 VAC (H3CA-8H only) | 1 SPDT relay and 2 NPN open collector transistor outputs | Time limit - DPDT, 5A, 250 VAC Transistor, 100 mA, 30 VDC (PNP/NPN) Instantaneous - DPDT, 5A, 250 VAC Transistor, 100 mA, 30 VDC (NPN/ PNP) | Time limit - DPDT, 5A, 250 VAC; Instantaneous - DPDT, 5A, 250 VAC |
| **Operation modes** | 12 selectable modes including ON-delay, repeat cycle, signal OFF-delay, interval, cumulative, ON/OFF duty adjustable cycle, twin timer | 8 selectable modes including ON-delay only or multi-mode model with ON-delay, repeat cycle, signal interval/ OFF-delay, 2 types of signal OFF-delay, interval, cycle and signal ON-delay/OFF-delay | 9 selectable modes including ON-delay, repeat cycle, signal OFF-delay, interval, cumulative | Select 2-4-6 function models including ON-delay and one-shot, interval or selectable ON-delay, repeat cycle (two types), signal ON/OFF delay, signal OFF delay, interval | Repeat cycle: Independent ON or OFF time |
| **Ranges** | 0.001 second to 9999 hours | 0.1 second to 9990 hours (field selectable time units from 0.1 sec to 10 h x 3 digits) | 0.001 second to 9999 hours (field selectable) | 0.05 second to 300 hours or 0.1 second to 600 hours | 0.05 second to 30 hours; 1.2 second to 300 hours |
| **Display/indication** | 4-digit negative transmissive LCD; Programmable display color for output indication | LCD output status and percent time remaining bar graph | Alphanumeric 4-digit LCD display has 12 mm high characters and built-in backlight | Power ON, Output ON LEDs | Output ON and Output OFF LEDs |
| **Supply voltage** | 100 to 240 VAC or 24 VAC / 12 to 24 VDC | 24 to 240 VAC, 50/60 Hz and 12 to 240 VDC (8-pin model) 24, 100/110/120, 200/220/240 VAC, 50/60 Hz 12, 24, 48, 110 VDC | 100 to 240 VAC, 50/60 Hz or 24 VAC, 50/60 HZ and 12 to 24 VDC | AC 100 – 240/ DC 100-125; DC 24 to 48/ DC 12 - 48 | 100 to 240 VAC, 50/60 Hz 12 VDC; 24 VAC/VDC |
| **Mounting** | Panel, track, surface | Panel, track, surface | Panel | Panel, track, surface | Panel, track, surface |
| **Accessories** | Sockets, panel mounting adapter, DIN rail | Sockets, protective covers, adapters for panel mounting, DIN rail | NEMA 4 waterproof cover, soft cover, shock prevention terminal cover | Sockets, panel covers in three colors, time setting ring, protective covers, adapters for panel mounting, DIN rail | Sockets, panel covers in three colors, time setting ring, protective covers, adapters for panel mounting, DIN rail |
| **Approvals** | cULus, cURus, CE | UL, CSA, SEV | UL, CSA, SEV, CE | UL, CSA, SEV, CE, VDE | UL, CSA, CE (LV) |

| | H3DE | H3YN | H5S | H5L |
|---|---|---|---|---|
| | | | | |
| **Dimensions mm (in)** | 75 H x 22.5 W x 100 D (2.95 x 0.89 x 3.94) | 28 H x 21.5 W x 56.6 D (1.10 x 0.85 x 2.23) | 72 H x 72 W x 49 D (2.83 x 2.83 x 1.93) | 96 H x 96 W x 56.5 D (3.78 x 3.78 x 2.22) |
| **Features** | • Slim analog set timers with field-selectable ranges and multiple operation modes<br>• Built-in DIN rail clamp for easy track mounting | • Subminiature analog solid-state time delay relay<br>• Multiple time ranges and operating modes<br>• Track solder terminal or wire-wrap terminal mounting via sockets<br>• Fits MY socket | • AM/PM display with 24 program steps and quartz accuracy<br>• ON/OFF, cycle and pulse operations<br>• LCD shows output status and current or next program step | • Two independent 15-amp circuits<br>• Manual override of outputs<br>• Simple prompted programming<br>• Fits 1/4 DIN panel cut out |
| **Product type** | Multi-mode | ON-delay/Interval/Repeat Cycle | Weekly timer | Weekly timer |
| **Control outputs** | Time limit - SPDT, 5A, 250 VAC or SPDT x 2 - programmable between time limiting and instantaneous | Time limit - DPDT, 5A, 250 VAC; 4PDT, 3A, 250 VAC | Time limit - SPST x 2, 15A, 250 VAC | Time limit - 15A, 125 VAC |
| **Operation modes** | ON-delay, Repeat cycle/signal OFF start, Repeat cycle/signal ON start, Signal ON/OFF-delay, Signal OFF-delay, Interval, one shot | ON-delay/Interval/Repeat Cycle | ON/OFF, repeat cycle, pulse | Repeat cycle, individual program for each circuit |
| **Ranges** | 0.1 second to 120 hours | 0.1 second to 10 minutes or 0.1 minute to 10 hours | 1 week | 1 minute to 23 hours 59 minutes |
| **Display/indication** | Power and Output ON LEDs | Power ON LED; Time UP LED | LCD; time, day, output status, program step | LCD; day, time, program, circuit status |
| **Supply voltage** | 24- 230 VAC/VDC | 24, 100/120, 200/230 VAC; 50/60 Hz; 12, 24 VDC | 100 to 240 VAC, 50/60 Hz | 100 to 240 VAC, 50/60 Hz |
| **Mounting** | Track | Panel, track, surface | Panel, surface, track | Panel, track, surface |
| **Accessories** | DIN rail | Sockets, panel mounting adapter, DIN rail | Protective cover, track adapter, DIN rail | Protective cover, DIN rail |
| **Approvals** | UL, CSA, CE | UL, CSA, CE (LV) | UL, CSA | UL, CSA, SEV |

| | | | | | |
|---|---|---|---|---|---|
| | **H7CX** | **H7BR** | **H7EC** | **H7ET** | **H7ER** |
| **Dimensions mm (in)** | 48 H x 48 W x 100 D (1.89 x 1.89 x 3.94) | 72 H x 72 W x 100 D (2.83 x 2.83 x 3.94) | 24 H x 48 W x 53.5 D (0.94 x 1.89 x 2.11) | 24.0 H x 48 W x 53.5 D (0.94 x 1.89 x 2.11) | 24.0 H x 48 W x 53.5 D (0.94 x 1.89 x 2.11) |
| **Features** | • Advanced programmable display<br>• PNP/NPN input<br>• Prescaling function<br>• Up/down counting<br>• Programmable via front or dip switches on back<br>• NEMA 4 front | • Multi-function digital counter with backlit LCD display<br>• Single and double preset and ± range<br>• Batch counter<br>• Contact and transistor outputs available | • 7 segment LCD with or without backlight<br>• Large display height 8.6 mm (0.338 in.)<br>• NEMA 4 front | • 7 segment LCD with or without backlight<br>• Large display height 8.6 mm (0.338 in.)<br>• NEMA 4 front | • 7 segment LCD with or without backlight<br>• Large display height 8.6 mm (0.338 in.)<br>• NEMA 4 front |
| **Number of digits** | 4 or 6 | 6 | 8 | 7 | 4 or 5 |
| **Operation modes** | UP, DOWN, reversible, tachometer, totalizer, dual-counter, batch, single or dual presets | UP, DOWN, reversible | UP counting | UP counting | UP counting |
| **Counter input** | NPN/PNP selectable | No voltage or voltage | PNP/NPN DC voltage; AC voltage; No-voltage contact | PNP/NPN DC voltage; AC voltage; No-voltage contact | PNP/NPN DC voltage; No voltage contact |
| **Count speed** | 30 cps, 5 Kcps, 10 Kcps (prescale) | 30 cps, or 1, 5, or 10 Kcps | 20 cps (AC/DC voltage); 30 cps/1 Kcps selectable (NPN/PNP DC voltage) | 1 sec. | 1 Kcps or 10 Kcps; 1 pulse/rev., 60 pulses/ rev., or 600 pulses/rev. |
| **Ranges** | 0 to 9999 (4 digits) 0 to 999,999 (6 digits) | 0 to 999,999 for preset models, and -99,999 to 999,999 for ± | 0 to 99,999,999 | Selectable between 999,999.9 hrs. and 3,999 days 23.9 hrs.; 999 hrs. 59 min. 59 sec. and 9,999 hrs. 59.9 min. | 0 to 1,000 rps; 1,000.0 rpm; 1,000.0 rps; 10,000 rpm |
| **Supply voltage** | 100-240 VAC or 24 VAC / 12 to 24 VDC | 100 to 240 VAC, 50/60 Hz or 24 VAC/ 12 to 24 VDC | Not required for non-backlight models; 24 VDC required for backlight models | Not required for non-backlight models; 24 VDC required for backlight models | Not required for non-backlight models; 24 VDC required for backlight models |
| **Control output** | Contact, transistor or both (programmable) | Contacts: 3A, 250 VAC; Transistor: Open collector, 100 mA at 30 VDC max. Residual voltage 2 V Max. | – | – | – |
| **Connections** | Screw terminals or 11-pin socket | Screw terminals | Screw terminals or wire wrap; 8 solder terminals | Screw terminals or wire wrap | Screw terminals |
| **Mounting** | Panel, track or surface | Flush mount | Panel | Panel | Panel |
| **Approvals** | cULus, cURus, CE | UL, CSA, CE | UL, CE, CSA, VDE | UL, CE, CSA, VDE | UL, CSA, CE, VDE |

| | K3HB-S | K3HB-X | K3HB-H | K3HB-V |
|---|---|---|---|---|
| | | | | |
| **Dimension** | 48 H x 96 W x 95 D (1.89 x 3.78 x 3.74) | 48 H x 96 W x 95 D (1.89 x 3.78 x 3.74) | 48 H x 96 W x 95 D (1.89 x 3.78 x 3.74) | 48 H x 96 W x 95 D (1.89 x 3.78 x 3.74) |
| **Features** | • Advanced inspection controller with high speed response of 2,000 times per second<br>• This is ideal for high-speed measurement with discrimination from 1 or 2 independent analog inputs<br>• Sampling period is measured at 0.5 ms with an output response time of 1 ms max. | • Intelligent signal processor for AC or DC signal or voltage<br>• Multiple ranges can be covered by a single meter<br>• Programmable via serial communications or front panel<br>• Field replaceable output | • High-speed temperature indicator with high accuracy input resolution for both Platinum resistance and Thermocouples<br>• This unit is also equipped with simple input shift using two points, hysteresis, peak/hold value, and more | • Ideal weighing indicator for making good/no-good judgments<br>• Could measure pressure, load, torque, and weight by using load cell signal input |
| **Product type** | Linear Sensor Indicator | Process Meter | Temperature Meter | Weighing Meter |
| **Input type** | Dual analog inputs:<br>DC current: 0-20 mA, 4-20 mA<br>DC voltage: 0-5 V, 1-5 V, ±5 V, ±10 V | DC voltage: 199.99 V, 19,999 V, 1.9999 V, 1.0000 to 5.0000 V;<br>AC voltage: 0.0 to 400.0 V, 0.00 to 199.99 V, 0.000 to 19.999 V, 0.0000 to 1.9999 V;<br>DC current: 199.99 mA, 19.999 mA, 1.9999 mA, 4.000 to 20.000 mA;<br>AC current: 0.000 to 10.000 A, 0.0000 to 1.9999 A, 0.00 to 199.99 mA, 0.000 to 19.999 mA | Thermocouples: K, J, T, E, L, U, N, R, S, B, W;<br>Platinum resistance: Pt100 | DC voltage: 0.00 to 199.99 mV, 0.000 to 19.999 mV, ±100.00 mV, ±199.99 mV |
| **Display** | 5-digit, 7-segment Negative Transmissive LCD | 5-digit, 7-segment Negative Transmissive LCD | 5-digit, 7-segment Negative Transmissive LCD | 5-digit, 7-segment Negative Transmissive LCD |
| **Setting Options** | Front pushbuttons or Serial communications | Front pushbuttons or Serial communications | Front pushbuttons or Serial communications | Front pushbuttons or Serial communications |
| **Event Inputs** | 5 point NPN;<br>8 point NPN;<br>5 point PNP;<br>8 point PNP | 5 point NPN;<br>8 point NPN;<br>5 point PNP;<br>8 point PNP | 5 point NPN;<br>8 point NPN;<br>5 point PNP;<br>8 point PNP | 5 point NPN;<br>8 point NPN;<br>5 point PNP;<br>8 point PNP |
| ***Control outputs*** | | | | |
| **Combination output boards with Power Supply (PS)** | SPDT and 12 VDC PS;<br>SPDT and 10 VDC PS;<br>0-20 mA and 12 VDC PS;<br>0-20 mA and 10 VDC PS;<br>0-5, 0-10 VDC and 12 VDC PS;<br>RS-232C and 12 VDC PS;<br>RS-232C and 10 VDC PS;<br>RS-485 and 12 VDC PS;<br>RS-485 and 10 VDC PS | SPDT and 12 VDC PS;<br>SPDT and 10 VDC PS;<br>0-20 mA and 12 VDC PS;<br>0-20 mA and 10 VDC PS<br>0-5, 0-10 VDC and 12 VDC PS;<br>RS-232C and 12 VDC PS;<br>RS-232C and 10 VDC PS;<br>RS-485 and 12 VDC PS;<br>RS-485 and 10 VDC PS | SPDT and 12 VDC PS;<br>SPDT and 10 VDC PS;<br>0-20 mA and 12 VDC PS;<br>0-20 mA and 10 VDC PS;<br>0-5, 0-10 VDC and 12 VDC PS;<br>RS-232C and 12 VDC PS;<br>RS-232C and 10 VDC PS;<br>RS-485 and 12 VDC PS;<br>RS-485 and 10 VDC PS | SPDT and 12 VDC PS;<br>SPDT and 10 VDC PS;<br>0-20 mA and 12 VDC PS;<br>0-20 mA and 10 VDC PS;<br>0-5, 0-10 VDC and 12 VDC PS;<br>RS-232C and 12 VDC PS;<br>RS-232C and 10 VDC PS;<br>RS-485 and 12 VDC PS ;<br>RS-485 and 10 VDC PS |
| **Power Supply** | 12 VDC only or 10 VDC only | 12 VDC only or 10 VDC only | 12 VDC only or 10 VDC only | 12 VDC only or 10 VDC only |
| **Relay** | 2-SPDT; 4-SPST | 2-SPDT; 4-SPST | 2-SPDT; 4-SPST | 2-SPDT; 4-SPST |
| **Transistor** | 5-NPN; 5-PNP | 5-NPN; 5-PNP | 5-NPN; 5-PNP | 5-NPN; 5-PNP |
| **DeviceNet** | Yes | Yes | Yes | Yes |
| **Approvals** | cULus, CE | cULus, CE | cULus, CE | cULus, CE |

| | | | |
|---|---|---|---|
| | **K3MA-J** | **K3MA-L** | **K3MA-F** |
| **Dimensions mm (in)** | 48 H x 96 W x 97 D<br>(1.89 x 3.78 x 3.81) | 48 H x 96 W x 97 D<br>(1.89 x 3.78 x 3.81) | 48 H x 96 W x 97 D<br>(1.89 x 3.78 x 3.81) |
| **Features** | • Multi-range DC voltage/current input<br>• Front-panel key operation<br>• Scaling, front-panel forced-zero, zero-limit functions<br>• Short 80 mm depth front panel<br>• Water and dust-proof NEMA 4X front panel<br>• 2-color LEDs | • Wide input range<br>• 2 types of platinum-resistance thermometers and 10 types of thermocouples<br>• Front-panel key operation<br>• Water and dust-proof NEMA 4X front panel<br>• 2-color LEDs<br>• Temperature input shift and temperature unit selection functions<br>• Short 80 mm depth front panel | • Wide input range: contact, NPN, PNP, or voltage pulse<br>• Front-panel key operation<br>• Scaling, auto-zero time, startup compensation time functions<br>• Short 80 mm depth front panel<br>• Water and dust-proof NEMA 4X front panel<br>• 2-color LEDs |
| **Product type** | Process meter | Temperature meter | Frequency/rate meter |
| **Input type** | DC voltage: 1.000 to 3.000 V, 0.000 to 5.000 V, -5.000 to 5.000 V, -10.000 to 10.00 V;<br>DC current: 4.00 to 20.00 mA, 0.00 to 20.00 mA | Thermocouple: K, J, T, E, L, U, N R, S, B<br>RTD: Pt100, JPt100 | Rotary pulse |
| **Display** | 7-segment LCD backlit, red and green LEDs | 7-segment LCD backlit, red and green LEDs | 7-segment LCD backlit, red and green LEDs |
| **Setting options** | Front-panel key | Front-panel key | Front-panel key |
| ***Control outputs*** | | | |
| **Relay** | 2 SPST-NO | 1 SPDT | 2 SPST-NO |
| **Transistor** | N/A | N/A | N/A |
| **BDC** | N/A | N/A | N/A |
| **Linear** | N/A | N/A | N/A |
| **Alarm** | N/A | N/A | N/A |
| **Serial communications outputs** | N/A | N/A | N/A |
| **PC software** | N/A | N/A | N/A |
| **Approvals** | cULus, CE | cULus, CE | cULus, CE |

# Terms and Conditions of Sales

1. Definitions: The words used herein are defined as follows.
   (a)Terms: These terms and conditions
   (b)Seller: Omron Electronic Components LLC and its subsidiaries
   (c)Buyer: The buyer of Products, including any end user in section III through VI
   (d)Products: Products and/or services of Seller
   (e)Including: Including without limitation
2. Offer; Acceptance: These Terms are deemed part of all quotations, acknowledgments, invoices, purchase orders and other documents, whether electronic or in writing, relating to the sale of Products by Seller. Seller hereby objects to any Terms proposed in Buyer's purchase order or other documents which are inconsistent with, or in addition to, these Terms.
3. Distributor: Any distributor shall inform its customer of the contents after and including section III of these Terms.

1. Prices; Payment: All prices stated are current, subject to change without notice by Seller. Buyer agrees to pay the price in effect at time of shipment. Payments for Products received are due net 30 days unless otherwise stated in the invoice. Buyer shall have no right to set off any amounts against the amount owing in respect of this invoice.

2. Discounts: Cash discounts, if any, will apply only on the net amount of invoices sent to Buyer after deducting transportation charges, taxes and duties, and will be allowed only if (a) the invoice is paid according to Seller's payment terms and (b) Buyer has no past due amounts owing to Seller.
3. Interest: Seller, at its option, may charge Buyer 1.5% interest per month or the maximum legal rate, whichever is less, on any balance not paid within the stated terms.
4. Orders: Seller will accept no order less than 200 U.S. dollars net billing.
5. Currencies: If the prices quoted herein are in a currency other than U.S. dollars, Buyer shall make remittance to Seller at the then current exchange rate most favorable to Seller; provided that if remittance is not made when due, Buyer will convert the amount to U.S. dollars at the then current exchange rate most favorable to Seller available during the period between the due date and the date remittance is actually made.
6. Governmental Approvals: Buyer shall be responsible for all costs involved in obtaining any government approvals regarding the importation or sale of the Products.
7. Taxes: All taxes, duties and other governmental charges (other than general real property and income taxes), including any interest or penalties thereon, imposed directly or indirectly on Seller or required to be collected directly or indirectly by Seller for the manufacture, production, sale, delivery, importation, consumption or use of the Products sold hereunder (including customs duties and sales, excise, use, turnover and license taxes) shall be charged to and remitted by Buyer to Seller.
8. Financial: If the financial position of Buyer at any time becomes unsatisfactory to Seller, Seller reserves the right to stop shipments or require satisfactory security or payment in advance. If Buyer fails to make payment or otherwise comply with these Terms or any related agreement, Seller may (without liability and in addition to other remedies) cancel any unshipped portion of Products sold hereunder and stop any Products in transit until Buyer pays all amounts, including amounts payable hereunder, whether or not then due, which are owing to it by Buyer. Buyer shall in any event remain liable for all unpaid accounts.
9. Cancellation; Etc: Orders are not subject to rescheduling or cancellation unless Buyer indemnifies Seller fully against all costs or expenses arising in connection therewith.
10. Force Majeure: Seller shall not be liable for any delay or failure in delivery resulting from causes beyond its control, including earthquakes, fires, floods, strikes or other labor disputes, shortage of labor or materials, accidents to machinery, acts of sabotage, riots, delay in or lack of transportation or the requirements of any government authority.
11. Shipping; Delivery: Unless otherwise expressly agreed in writing by Seller:
    (a) All sales and shipments of Products shall be FOB shipping point (unless otherwise stated in writing by Seller), at which point title to and all risk of loss of the Products shall pass from Seller to Buyer, provided that Seller shall retain a security interest in the Products until the full purchase price is paid by Buyer;
    (b) Delivery and shipping dates are estimates only; and
    (c) Seller will package Products as it deems proper for protection against normal handling and extra charges apply to special conditions.
12. Claims: Any claim by Buyer against Seller for shortage or damage to the Products occurring before delivery to the carrier must be presented in detail in writing to Seller within 30 days of receipt of shipment.

1. Suitability: IT IS THE BUYER'S SOLE RESPOINSIBILITY TO ENSURE THAT ANY OMRON PRODUCT IS FIT AND SUFFICIENT FOR USE IN A MOTORIZED VEHICLE APPLICATION. BUYER SHALL BE SOLELY RESPONSIBLE FOR DETERMINING APPROPRIATENESS OF THE PARTICULAR PRODUCT WITH RESPECT TO THE BUYER'S APPLICATION INCLUDING (A) ELECTRICAL OR ELECTRONIC COMPONENTS, (B) CIRCUITS, (C) SYSTEM ASSEMBLIES, (D) END PRODUCT, (E) SYSTEM, (F) MATERIALS OR SUBSTANCES OR (G) OPERATING ENVIRONMENT. Buyer acknowledges that it alone has determined that the Products will meet their requirements of the intended use in all cases. Buyer must know and observe all prohibitions of use applicable to the Product/s.
2. Use with Attention: The followings are some examples of applications for which particular attention must be given. This is not intended to be an exhaustive list of all possible use of any Product, nor to imply that any use listed may be suitable for any Product:
   (a) Outdoor use, use involving potential chemical contamination or electrical interference.
   (b) Use in consumer Products or any use in significant quantities.
   (c) Energy control systems, combustion systems, railroad systems, aviation systems, medical equipment, amusement machines, vehicles, safety equipment, and installations subject to separate industry or government regulations.
   (d) Systems, machines, and equipment that could present a risk to life or property.
3. Prohibited Use: NEVER USE THE PRODUCT FOR AN APPLICATION INVOLVING SERIOUS RISK TO LIFE OR PROPERTY WITHOUT ENSURING THAT THE SYSTEM AS A WHOLE HAS BEEN DESIGNED TO ADDRESS THE RISKS, AND THAT THE PRODUCT IS PROPERLY RATED AND INSTALLED FOR THE INTENDED USE WITHIN THE OVERALL EQUIPMENT OR SYSTEM.
4. Motorized Vehicle Application: USE OF ANY PRODUCT/S FOR A MOTORIZED VEHICLE APPLICATION MUST BE EXPRESSLY STATED IN THE SPECIFICATION BY SELLER.
5. Programmable Products: Seller shall not be responsible for the Buyer's programming of a programmable Product.

1. Warranty: Seller's exclusive warranty is that the Products will be free from defects in materials and workmanship for a period of twelve months from the date of sale by Seller (or such other period expressed in writing by Seller). SELLER MAKES NO WARRANTY OR REPRESENTATION, EXPRESS OR IMPLIED, ABOUT ALL OTHER WARRANTIES, NON-INFRINGEMENT, MERCHANTABILITY OR FITNESS FOR A PARTICULAR PURPOSE OF THE PRODUCTS.
2. Buyer Remedy: Seller's sole obligation hereunder shall be to replace (in the form originally shipped with Buyer responsible for labor charges for removal or replacement thereof) the non-complying Product or, at Seller's election, to repay or credit Buyer an amount equal to the purchase price of the Product; provided that there shall be no liability for Seller or its affiliates unless Seller's analysis confirms that the Products were handled, stored, installed and maintained and not subject to contamination, abuse, misuse or inappropriate modification. Return of any Products by Buyer must be approved in writing by Seller before shipment.
3. Limitation on Liability: SELLER AND ITS AFFILIATES SHALL NOT BE LIABLE FOR SPECIAL, INDIRECT, INCIDENTAL OR CONSEQUENTIAL DAMAGES, LOSS OF PROFITS OR PRODUCTION OR COMMERCIAL LOSS IN ANY WAY CONNECTED WITH THE PRODUCTS, WHETHER SUCH CLAIM IS BASED IN CONTRACT, WARRANTY, NEGLIGENCE OR STRICT LIABILITY. FURTHER, IN NO EVENT SHALL LIABILITY OF SELLER OR ITS AFFILITATES EXCEED THE INDIVIDUAL PRICE OF THE PRODUCT ON WHICH LIABILITY IS ASSERTED.
4. Indemnities: Buyer shall indemnify and hold harmless Seller, its affiliates and its employees from and against all liabilities, losses, claims, costs and expenses (including attorney's fees and expenses) related to any claim, investigation, litigation or proceeding (whether or not Seller is a party) which arises or is alleged to arise from Buyer's acts or omissions under these Terms or in any way with respect to the Products.

1. Intellectual Property: The intellectual property embodied in the Products is the exclusive property of Seller and its affiliates and Buyer shall not attempt to duplicate it in any way without the written permission of Seller. Buyer (at its own expense) shall indemnify and hold harmless Seller and defend or settle any action brought against Seller to the extent that it is based on a claim that any Product made to Buyer specifications infringed intellectual property rights of another party.
2. Property; Confidentiality: Notwithstanding any charges to Buyer for engineering or tooling, all engineering and tooling shall remain the exclusive property of Seller. All information and materials supplied by Seller to Buyer relating to the Products are confidential and proprietary, and Buyer shall limit distribution thereof to its trusted employees and strictly prevent disclosure to any third party.
3. Performance Data: Performance data is provided as a guide in determining suitability and does not constitute a warranty. It may represent the result of Seller's test conditions, and the users must correlate it to actual application requirements.
4. Change In Specifications: Product specifications and description may be changed at any time based on improvements or other reasons. It is Seller's practice to change part numbers when published ratings or features are changed, or when significant engineering changes are made. However, some specifications of the Product may be changed without any notice.
5. Errors And Omissions: The information on Seller's website or in other documentation has been carefully checked and is believed to be accurate; however, no responsibility is assumed for clerical, typographical or proofreading errors or omissions.
6. Export Controls: Buyer shall comply with all applicable laws, regulations and licenses regarding (a) export of the Products or information provided by Seller; (b) sale of Products to forbidden or other proscribed persons or organizations; (c)disclosure to non-citizens of regulated technology or information.

1. Waiver: No failure or delay by Seller in exercising any right and no course of dealing between Buyer and Seller shall operate as a waiver of rights by Seller.
2. Assignment: Buyer may not assign its rights hereunder without Seller's written consent.
3. Law: These Terms are governed by Illinois law (without regard to conflict of laws). Federal and state courts in Illinois have exclusive jurisdiction for any dispute hereunder.
4. Amendment: These Terms constitute the entire agreement between Buyer and Seller relating to the Products, and no provision may be changed or waived unless in writing signed by the parties.
5. Severability: If any provision hereof is rendered ineffective or invalid, such provision shall not invalidate any other provision.

# Omron Electronic Components

## Master Selection Guide…

*Comprehensive and easy to use specifying tool for:*

**Relays, The #1 Supplier In The World:**
- MOS FET
- Low Signal
- RF/HF
- Power PCB
- Automotive
- General-Purpose
- Solid State

**Switches:**
- Snap Action
- Tactile
- DIP
- Dome Array
- Thumbwheel
- Rocker

**Photomicrosensors:**
- Slotted
- Reflective

**Micro Sensors:**
- Pressure
- Tilt
- Flow
- Shock/Vibration
- Clog Filter

**Connectors**
- FPC
- FFC

**NEW**

**Touch Sensing ICs**
**UWB Antennas**

Request your copy and additional information
by visiting: www.components.omrom.com, or
by calling us at: 847.882.2288
Monday through Friday 7:30 AM until 6:00 PM CST.

## Omron Electronic Components: The Quality, Flexibility and Global Support You Need

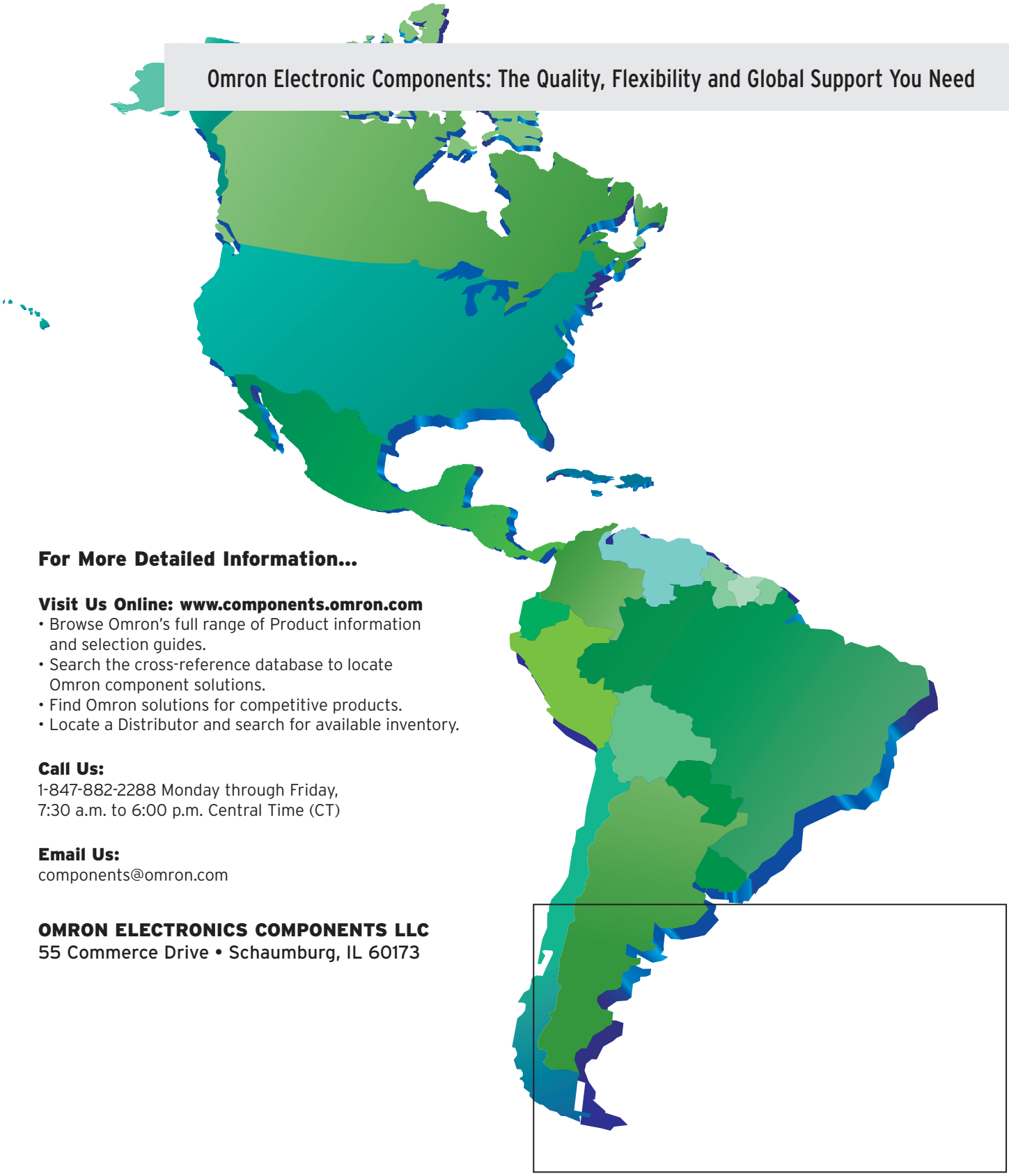

### For More Detailed Information...

**Visit Us Online: www.components.omron.com**
- Browse Omron's full range of Product information and selection guides.
- Search the cross-reference database to locate Omron component solutions.
- Find Omron solutions for competitive products.
- Locate a Distributor and search for available inventory.

**Call Us:**
1-847-882-2288 Monday through Friday,
7:30 a.m. to 6:00 p.m. Central Time (CT)

**Email Us:**
components@omron.com

**OMRON ELECTRONICS COMPONENTS LLC**
55 Commerce Drive • Schaumburg, IL 60173

Y011C-E-01
© 2006 Omron Electronic Components, Printed in the U.S.A.
12/2006

**www.components.omron.com**

OMRON®
ELECTRONIC COMPONENTS

Мы молодая и активно развивающаяся компания в области поставок электронных компонентов. Мы поставляем электронные компоненты отечественного и импортного производства напрямую от производителей и с крупнейших складов мира.

Благодаря сотрудничеству с мировыми поставщиками мы осуществляем комплексные и плановые поставки широчайшего спектра электронных компонентов.

Собственная эффективная логистика и склад в обеспечивает надежную поставку продукции в точно указанные сроки по всей России.

Мы осуществляем техническую поддержку нашим клиентам и предпродажную проверку качества продукции. На все поставляемые продукты мы предоставляем гарантию .

Осуществляем поставки продукции под контролем ВП МО РФ на предприятия военно-промышленного комплекса России , а также работаем в рамках 275 ФЗ с открытием отдельных счетов в уполномоченном банке. Система менеджмента качества компании соответствует требованиям ГОСТ ISO 9001.

Минимальные сроки поставки, гибкие цены, неограниченный ассортимент и индивидуальный подход к клиентам являются основой для выстраивания долгосрочного и эффективного сотрудничества с предприятиями радиоэлектронной промышленности, предприятиями ВПК и научно-исследовательскими институтами России.

С нами вы становитесь еще успешнее!

**Наши контакты:**

**Телефон:** +7 812 627 14 35

**Электронная почта:** sales@st-electron.ru

**Адрес:** 198099, Санкт-Петербург, Промышленная ул, дом № 19, литера Н, помещение 100-Н Офис 331